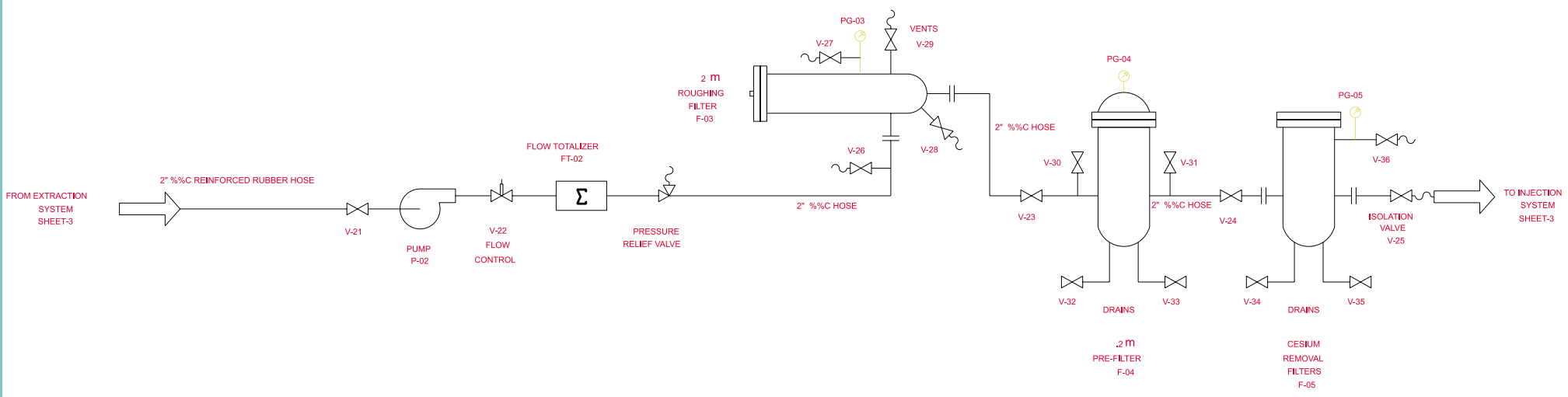

This drawing and all information on it may contain patented or proprietary property of Informatics Corp. Neither this drawing nor any part of it can be used to fabricate or quote to fabricate without the written consent of Informatics Corporation.

	REVISIONS	DATE	BY
A			
B			
C			
D			
E			
F			
G			

INFORMATICS CORPORATION

TITLE: P & ID-3M FILTER SYSTEM

FOR:

DATE: 01-20-02

SCALE:

DRAWN:

CHK:

DES:

DRAWING NUMBER: BCLDP-0002 sht 2/4