1/4/02 CB

BJC/PAD-279/V2

ENVIRONMENTAL MANAGEMENT
& ENRICHMENT FACILITIES
MANAGEMENT AND INTEGRATION CONTRACT

Final Inventory/Characterization Report for the C-331-09 Department of Energy Material Storage Area at the Paducah Gaseous Diffusion Plant, Paducah, Kentucky

D-17609-0002

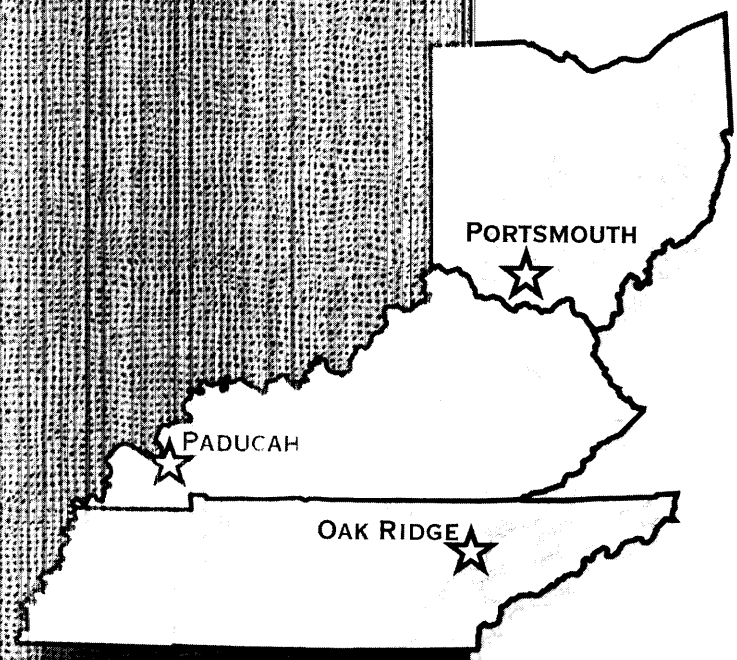

MANAGED BY
BECHTEL JACOBS COMPANY LLC
FOR THE UNITED STATES
DEPARTMENT OF ENERGY

This document has received the appropriate reviews for release to the public.

PADUCAH EM&EF DOCUMENT RELEASE FORM

PERSON REQUESTING RELEASE: T. J. ELLINGTON TELEPHONE NO.:

MAILING ADDRESS: C412 T03 DIVISION OR ORGANIZATION: WESKEM

DATE BY WHICH RELEASE IS REQUIRED: ASAP

STANDARD PROCESSING TIME IS 5 WORKING DAYS. SOME DOCUMENTS REQUIRE SPECIAL REVIEW AND THE PROCESSING TIME WILL BE LONGER.

REQUEST FOR REVIEW OF OCCURRENCE REPORTS REQUIRES DIVISION MANAGER SIGNATURE:

SIGNATURE: Joe Kg DATE: 10-16-01 TIME:

DOCUMENT **DESCRIPTION** (TO BE COMPLETED BY REQUESTER)

DOCUMENT NUMBER: BJC/PAD 279 V2 PAGES: 209

DOCUMENT TITLE: FINAL INVENTORY/CHARACTERIZATION REPORT FOR THE C331-09 DEPARTMENT OF ENERGY MATERIAL STORAGE AREA PGDP, PADUCAH, KY

AUTHORS(S) (INDICATE OTHER DIVISIONS OR ORGANIZATIONS, IF APPLICABLE):

DOCUMENT TYPE (SEE DOC. PREP. GUIDE, CHS. 1 AND 2, FOR DEFINITIONS OF DOCUMENT TYPES): ☐ DRAWING ☐ PHOTO ☑ FORMAL REPORT

☐ OCCURRENCE REPORT ☐ PROGRESS REPORT ☐ INFORMAL REPORT ☐ ABSTRACT ☐ CORRESPONDENCE ☐ OTHER VISUALS

☐ ADMINISTRATIVE RECORD DOCUMENT

☐ JOURNAL ARTICLE (IDENTIFY JOURNAL):

☐ ORAL PRESENTATION (IDENTIFY MEETING, SPONSOR, LOCATION, DATE):

WILL ORAL PRESENTATION BE PUBLISHED IN PROGRAM, BOOKLET, BROCHURE, ETC.? ☐ YES ☐ NO ☑ NOT KNOWN

WILL COPIES OF THE ORAL PRESENTATION BE DISTRIBUTED: ☐ BEFORE, ☐ AFTER, ☐ DURING THE MEETING? ☐ NO DISTRIBUTIONS WILL BE MADE

☐ OTHER (SPECIFY):

PURPOSE OF RELEASE:

DOES THIS DOCUMENT DISCLOSE ANY NEW EQUIPMENT, PROCESS, OR MATERIAL? ☐ YES ☒ NO

IS COPYRIGHTED MATERIAL CONTAINED IN THIS DOCUMENT? (IF PRESENT, ATTACH RELEASE): ☐ YES ☒ NO

CLASSIFICATION AND TECHNICAL INFORMATION OFFICER ACTION (COMPLETED BY CLASSIFICATION AND TECHNICAL INFORMATION OFFICER)

CLASSIFICATION ACTION TAKEN: ☐ NOT APPROVED FOR RELEASE (SEE BELOW) ☑ APPROVED FOR RELEASE WITHOUT CHANGE

☑ DOCUMENT IS UNCLASSIFIED ☐ DOCUMENT IS CLASSIFIED

DERIVATIVE CLASSIFIER OR CLASSIFICATION OFFICER SIGNATURE NAME: Joe Kg DATE: 10-16-01 TIME:

TITLE: DMSA INSPECTOR

RW 10-17-01 1105

TECHNICAL INFORMATION ACTION TAKEN: ☐ NOT APPROVED FOR RELEASE (SEE BELOW) ☒ APPROVED FOR RELEASE WITHOUT CHANGE

TECHNICAL INFORMATION OFFICER SIGNATURE: K L Wallace DATE: 10/17/01 TIME: 1105

TITLE: TIO

SENT TO OSTI: ☐ YES ☐ NO

REMARKS:

CP-20382 (5 6-6-95)

BJC/PAD- 279/V2

Final Inventory/Characterization Report for the C-331-09 Department of Energy Material Storage Area (DMSA) at the Paducah Gaseous Diffusion Plant, Paducah, Kentucky

Date Completed August 30,2001

Date Issued – October, 2001

Prepared by
WESKEM, LLC
Under subcontract 23900-BA-RMOO5F
Prepared for the
US Department of Energy
Office of Environmental Management

BECTEL JACOBS COMPANY LLC
managing the
Environmental Management Activities at the
East Tennessee Technology Park
Oak Ridge Y-12 Plant **Oak** Ridge National Laboratory
Paducah Gaseous Diffusion Plant Portsmouth Gaseous Diffusion Plant
Under contract DE-AC05-98OR22700
for the
U.S. DEPARTMENT OF ENERGY

CONTENTS

ACRONYMS..... v

EXECUTIVE SUMMARY..... .vii

Section 1. ZONE MAP

Section 2. CHARACTERIZATIONPHOTOGRAPHS

Section 3. MATERIALS TRANSFERRED

Section 4. INVENTORY AND CHARACTERIZATIONREPORT

Section 5. DMSA C-331-09 INVENTORY

Section **6.** REUSABLE MATERIAL INVENTORY

Section 7. RFD FORMS

Section **8.** REUSABLE MATERIALS – E FORMS

Section 9. SME INSPECTION

Section 10. HP SURVEY

Section 11. HP SMEAR AND AIR SAMPLE ACTIVITY REPORT

Section 12. IH SAMPLING DATA

ACRONYMS

DMSA	Department of Energy Materials Storage Area
DOE	Department of Energy
EPA	Environmental Protection Agency
HP	Health Physics
IH	Industrial Hygiene
Lc	Level Sub C
LLW	Low Level Waste
NCS	Nuclear Criticality Safety
PCB	Poly Chlorinated Biphenyl
PEL	Permissible Exposure Limits
QA	Quality Assurance
QC	Quality Control
RCRA	Resource Conservation and Recovery Act
RFD	Request for Disposal
SAA	Satellite Accumulation
SME	Subject Matter Expert
TSCA	Toxic Substance Control Act

EXECUTIVE SUMMARY

The field activities for the Department of Energy Materials Storage Area (DMSA) C-331-09 began on July 20,2001 and were completed on August 30,2001 at the Paducah Gaseous Diffusion Plant (PGDP). There were no Resource Conservation and Recovery Act (RCRA) or Toxic Substance Control Act (TSCA)/Poly Chlorinated Biphenyl (PCB) items identified, but there were low level waste (LLW) items and reusable materials items identified and inventoried at this site. Section one (1) of this report is a diagram depicting the zones in the DMSA work area. Section two (2) contains characterization photographs of the initial entry and post entry. Section three (3) has the Materials Transfer forms. Sections four (4) through six (6) are various inventories containing material classifications, zones, volumes, and weights. Sections seven (7) and eight (8) are Request for Disposal (RFD) forms and Reusable Material forms generated for each item identified in the DMSA. Sections nine (9) through twelve (12) contain sampling strategies, sampling results, and direct readings.

Low Level Waste (LLW)

The LLW items included an internal component (cone), blank flanges of various sizes, C-310 converters, converter saddles, and a 1" diameter choker. All items had barcode labels and DMSA inventory tags placed on them and remain in the DMSA. The total volume of the LLW items inventoried was approximately 1,930 cubic feet with an estimated weight of 49,531 pounds. The LLW inventory is located in sections four (4) and five *(5)*.

Reusable Materials

The reusable material inventory comprised of miscellaneous equipment (which included a grinder), a "00" converter R-114 cooler, and a JLG scissor lift. Each item was marked with a unique identification number. The "00" converter R-114 cooler remains in the DMSA. The miscellaneous equipment and the JLG scissor lift are being utilized on other DMSA projects. The total volume of the reusable material inventoried was approximately 476 cubic feet with an estimated weight of 9,440 pounds. The reusable inventory is in section six (6).

Safety

There were no accidents, injuries, or illnesses associated with the characterization of this DMSA.

The Health Physics (HP) surveys conducted were smear samples, air samples, and direct readings. The radiological surveys concluded the highest contamination levels for Alpha and Beta/Gamma was on survey number 01-DM-06-S. The highest Alpha reading was 7,103dpm/100cm^2 on a C-310 converter. The highest Beta/Gamma reading was 1,066,106dpm/100cm^2 on a C-310 converter. The lowest detectible reading for Alpha was 43dpm/100cm^2 on two (2) blank flanges on survey number 01-DM-11-S and five (5) C-310 converters on survey number 01-DM-06-S. The lowest detectible reading for Beta/Gamma was 1187dpm/100cm^2 on a C-310 converter on survey number 01-DM-06-S. All other HP readings can be located in sections ten (10) and eleven (11).

The Industrial Hygiene **(M)** stated sample 310923-4OUPSI exceeded normal holding time but local instrument readings were confirmed with analytical results; therefore no impact was observed on the data. IH concludes that the parameters measured had no airborne concentrations above permissible exposure limits (PEL). The analytical field data is located in section twelve (12).

Section 1.

ZONE MAP

DMSA 331-09

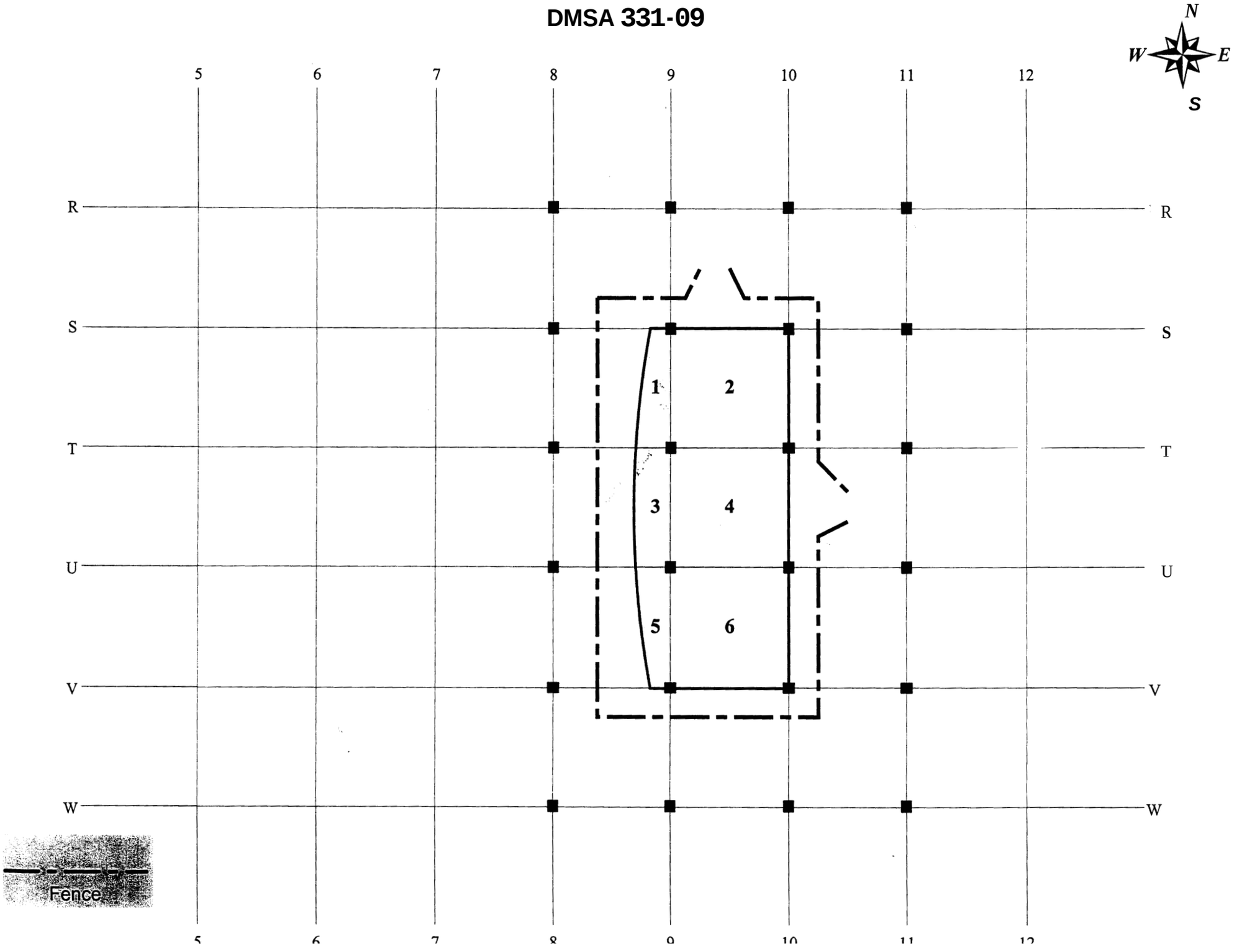

Section 2.

CHARACTERIZATION PHOTOGRAPHS

C-331-09 DMSA Manlift

C-331-09 DMSA Converter

C-331-09 DMSA Converters

C-331-09 DMSA Converter

Section 3.

MATERIALS TRANSFERRED

U. S. DEPARTMENT OF ENERGY
Paducah DMSA Material Transfer
(Page 1 of 2)

Current Location/DMSA Number (bldg /col /area) C-331 DMSA 9 COL #

Item Description & Quantity	New Location/DMSA # (bldg /ID /area)	U-235 Content or N/A	Method of Determination (see page 2, Sect. 1, of this form - insert applicable letter)	Paducah Bechtel Jacobs Company Potential USQ Evaluation (see page 2, Sect. 2, of this form - insert applicable letter)
1. Scissors Lift	5978-01	NA	d.	T-11
2. Miscellaneous Equipment - ~~Fans~~, Grinders ~~Ladders~~, etc	5978-02	NA	d.	T-11
Note	Fan + ladder Not Removed			

TJC 7/26/01

Requester: : [signature] Signature | 7-26-01 Date | 441-5217 Phone

USEC Notification #1: Smith Signature | 7-26-01 Date | 441 6226 Phone | C-331 Building Number

DOE Notification ~~USEC Notification #2~~: [signature] Signature | 7-27-01 Date | 6809 Phone | C-103 Building Number

Appropriate Health Physics Survey(s) must occur prior to relocating the material(s)

Task Complete: C M Taylor Signature | 7-27-01 Date | 5297 Phone

Requester: Submit a copy of the completed form and any attachments to the Paducah Bechtel Jacobs Company DMSA Superintendent and the original to the Kevil Document Management Center. Submit to the Kevil DMC only after all signatures have been obtained.

(PA-3002 - Rev. 0 10/00 Page 1 of 2)

Take to DMSA

1. One or more of the following conditions must be met for waste/material/equipment to be removed from a DMSA and transported through USEC-leased space (identify appropriate letter and record in appropriate column on page 1 of 2, attach documentation to form):

a. NDA measurements for ^{235}U content

b. Analytical data for ^{235}U content

c. Visual inspection of all surfaces (internal and external) showing item(s) to be free of uranium deposits

d. Waste/material/equipment history showing item(s) has not been used in a UF_6 process stream

2. Paducah Bechtel Jacobs Company Evaluation of USQ Concerns (identify appropriate letter and record in appropriate column on page 1 of 2; attach documentation to form):

a. USQ concerns resolved and waste/material/equipment may be removed.

b. USQ concerns not resolved and waste/material/equipment may not be removed.

c. USQ concerns are not resolved; however, the items identified on page 1 may be removed if Uncharacterized Items are not disturbed.

NA - ACTIVITIES FOR REMOVAL OF EQUIPMENT COVERED UNDER PROCEDURES

Bechtel Jacobs Company Signature — Date: 7/27/01

Notes/Comments: See front page

Section 4.

INVENTORY AND CHARACTERIZATION REPORT

Inventory By DMSA No.

Curr. Zone	RFD #	Barcode #	Description	Vol ft3	llw	tsca	rcra	mix	asb	fis	lnd	Gen. Date	Char. Date	Transferred To
C-331-09														
ZONE 2	110319	DMSAOI10826	C-310 INTERNAL COMPONENT (CONE)	1	☑	☐	☐	☐	☐	☐	☐	8/8/01	8/8/01	
ZONE 2	110451	DMSA0110801	C-310 CONVERTER C-8254	177	☑	☐	☐	☐	☐	☐	☐	8/7/01	8/7/01	
ZONE 2	110459	DMSA0110809	C-310 CONVERTER C-47449	177	☑	☐	☐	☐	☐	☐	☐	8/8/01	8/8/01	
ZONE 2	110460	DMSAOI10810	C-310 CONVERTER C-46440	177	☑	☐	☐	☐	☐	☐	☐	8/8/01	8/8/01	
ZONE 2	110461	DMSA0110811	C-310 CONVERTER INTERNAL CONE PLATE	1	☑	☐	☐	☐	☐	☐	☐	8/7/01	8/7/01	
ZONE 2	110462	DMSAOI10812	CONVERTER SADDLES	7.5	☑	☐	☐	☐	☐	☐	☐	8/7/01	8/7/01	
ZONE 2	110463	DMSAOI10813	CONVERTER SADDLES	7.5	☑	☐	☐	☐	☐	☐	☐	8/8/01	8/8/0	
ZONE 2	110464	DMSAOI10814	CONVERTER SADDLE	7.5	☑	☐	☐	☐	☐	☐	☐	8/8/01	8/8/01	
ZONE 2	110465	DMSA0110815	17" BLANK FLANGE	0.5	☑	☐	☐	☐	☐	☐	☐	8/9/01	8/9/01	
ZONE 2	110466	DMSAOI10816	20" BLANK FLANGE	0.5	☑	☐	☐	☐	☐	☐	☐	8/8/01	8/8/01	
ZONE 2	110467	DMSA0110817	4" BLANK FLANGE	0.25	☑	☐	☐	☐	☐	☐	☐	8/9/01	8/9/01	
ZONE 2	110469	DMSA0110819	1" DIAMETER CHOKER, 8 FT. LONG	0.5	☑	☐	☐	☐	☐	☐	☐	8/8/01	8/8/0	
ZONE 2	110470	DMSAOI10820	17" BLANK FLANGE	0.5	☑	☐	☐	☐	☐	☐	☐	8/8/01	8/8/01	
ZONE 2	110471	DMSAOI10821	17" BLANK FLANGE	0.5	☑	☐	☐	☐	☐	☐	☐	8/8/01	8/8/01	
ZONE 2	110472	DMSA0110822	C-310 INTERNAL COMPONENT (CONE)	1	☑	☐	☐	☐	☐	☐	☐	8/8/01	8/8/01	
ZONE 2	110473	DMSA0110823	C-310 INTERNAL COMPONENT (CONE)	1	☑	☐	☐	☐	☐	☐	☐	8/8/01	8/8/01	
ZONE 2	110474	DMSAOI10824	C-310 INTERNAL COMPONENT (CONE)	1	☑	☐	☐	☐	☐	☐	☐	8/8/01	8/8/01	
ZONE 2	110475	DMSAOI10825	C-310 INTERNAL COMPONENT	1	☑	☐	☐	☐	☐	☐	☐	8/8/01	8/8/01	
ZONE 4	110320	DMSA0110827	21" BLANK FLANGE	0.5	☑	☐	☐	☐	☐	☐	☐	8/8/01	8/8/01	
ZONE 4	110456	DMSA0110806	C-310 CONVERTER C-8235	177	☑	☐	☐	☐	☐	☐	☐	8/7/01	8/7/01	
ZONE 4	110457	DMSAOI10807	C-310 CONVERTER C-47450	177	☑	☐	☐	☐	☐	☐	☐	8/7/01	8/7/01	
ZONE 4	110458	DMSAOI10808	C-310 CONVERTER C-47451	177	☑	☐	☐	☐	☐	☐	☐	8/8/01	8/8/01	
ZONE 4	110476	DMSA0100125	MISC. EQUIPMENT.	128	☑	☐	☐	☐	☐	☐	☐	8/1/01		
ZONE 6	110452	DMSAOI10802	C-310 CONVERTER C-8257	177	☑	☐	☐	☐	☐	☐	☐	8/7/01	8/7/01	
ZONE 6	110453	DMSAOI10803	C-310 CONVERTER C-8255	177	☑	☐	☐	☐	☐	☐	☐	8/7/01	8/7/01	
ZONE 6	110454	DMSA0110804	C-310 CONVERTER C-47452	177	☑	☐	☐	☐	☐	☐	☐	8/7/01	8/7/01	
ZONE 6	110455	DMSA0110805	C-310 CONVERTER C-8258	177	☑	☐	☐	☐	☐	☐	☐	8/7/01	8/7/01	
Summary for C-331-09			*(27 RFDs)*	1929.75 *Ft3*										
Grand Total	*(27 RFDs)*			*1929.75 Total Ft3*										

Section 5.

DMSA C-331-09 INVENTORY

C-331-09 DMSA INVENTORY

Description	Original RFD #	Material Classification	Column #	Barcode	# Items	Volume Cubic Feet	Estimated Weight (lbs)	Material Transferred to USEC
Internal Component (cone)	110319	LLW	Zone 2	DMSAOI10826	1	1	150	No
21" Blank Flanae	110320		Zone 4	DMSAOI10827	1	0.5	100	No
C-310 Converter (C-8254)	110451		Zone 2	DMSAOI10801	1	177	4570	No
C-310 Converter (C-8257)	110452	LLW	Zone6	DMSAOI10802	1	177	4570	No
C-310 Converter (C-18255)	110453	LLW	Zone 6	DMSAOI10803	1	177	4570	No
C-310 Converter (C-47452)	I10454	LLW	Zone 6	DMSAOI10804	1	177	4570	NO
C-310 Converter (C-8258)	110455	LLW	Zone 6	DMSAOI10805	1	177	4570	No
C-310 Converter (C-8235)	110456	LLW	Zone 4	DMSAOI10806	1	177	4570	No
C-310 Converter (C-47450)	110457	LLW	Zone 4	DMSAOI10807	1	177	4570	No
C-310 Converter (C-47451)	110458	LLW	Zone 4	DMSAOI10808	1	177	4570	No
C-310 Converter (C-47449)	110459	LLW	Zone 2	DMSAOI10809	1	177	4570	No
C-310 Converter (C-46440)	110460	LLW	Zone2	DMSAOI10810	1	177	4570	No
C-310 Converter Internal Cone Plate	110461	LLW	Zone 2	DMSAOI1081	1	1	150	No
Converter Saddles	110462	LLW	Zone 2	DMSAOI10812	1	7.5	300	No
Converter Saddles	110463	LLW	Zone2	DMSAOI10813	1	7.5	300	No

Description	Original RFD #	Material Classification	Column #	Barcode	# Items	Volume Cubic Feet	Estimated Weight (lbs)	Material Transferred to USEC
Converter Saddles	110464	LLW	Zone2	DMSAOI10814	1	7.5	300	No
17" Blank Flange	110465	LLW	Zone 2	DMSAOI10815	1	0.5	100	No
20" Blank Flange	110466	LLW	Zone 2	DMSAOI10816	1	0.5	100	No
4" Blank Flange	110467	LLW	Zone 2	DMSA0110817	1	0.25	6	No
1" Diameter Choker, 8 ft long	110469	LLW	Zone 2	DMSAOI10819	1	0.5	25	No
17" Blank Flange	110470	LLW	Zone 2	DMSAOI10820	1	0.5	100	No
17" Blank Flange	110471	LLW	Zone2	DMSAOI10821	1	0.5	100	No
C-310 Internal Component (cone)	110472	LLW	Zone 2	DMSA0110822	1	1	150	No
C-310 Internal Component (cone)	110473	LLW	Zone 2	DMSAOI10823	1	[illegible]	150	No
C-310 Internal Component (cone)	110474	LLW	Zone 2	DMSAOI10824	[illegible]	1	150	No
C-310 Internal Component (cone)	110475	LLW	Zone 2	DMSAOI10825	1	1	150	No
ST-90 Container (fan, extension cord, ladder, welding rods and tarp)	110476	LLW	Zone 4	DMSA0100125	[illegible]	128	1500	No

Total Volume ft^3	*Total Estimated Weight (lbs)*
7,929.75	***49,537***

Section 6.

REUSABLE MATERIAL INVENTORY

C-331-09 REUSABLE MATERIAL INVENTORY

Description	Original E#	Material Classification	Column #	Barcode	# Items	Volume Cubic Feet	Estimated Weight (lbs)	Material Transferred to USEC
"00" Converter R-114 Cooler	E00001	Reusable	Zone 1	DMSA0110818	1	115	7400	No
Misc. Equipment, Grinder	E00081	Reusable	Zone 1	DMSA0100146	8	0.5	40	No
JLG Scissor Lift	E00082	Reusable	Zone 1	DMSA0100147	1	360	2000	No

Total Volume ft^3	*Total Estimated Weight (lbs)*
475.5	***9,440***

Section 7.

RFD FORMS

NOTE: All low level waste remains in the DMSA until DOE approval for low level waste remediation.

DOE

LLW

RFD

Request For Disposal

Document ID Number 110319

W1. Generator's Name (Print)	W2. Badge No.	W3. Generator's Phone No.	W3. Mail Stop	W5. Charge No. / WO
Terri Ross	31871	5325	C7431	

W6. Generator's Company	W7. Corp Owner	W8. Origin Site	W9. Origin Facility	W10. Origin Area	W11. Rad Area?
WESKEM	DOE	~~PGDP~~	C-331	C 331.09	☒ Yes ☐ No

W12. Number of Items	W13. Process Category (GCC)	W14. Process Activity Code	W15. AWA Number	W16. Physical Form
1	LEG	A93	N/A	Solid

W17. Material Type(s)	W18. Holding Site	W19. Holding Facility	W20. Holding Area	W21 RFD Attachment
MT007	PGDP	C-331	C-331.09	☒ A ☐ B ☐ C

Waste Subcategories (Check all that apply)

	Yes	No		Yes	No		Yes	No		Yes	No
W22. Biological		✓	W25. Const. Debris		✓	W28. Non-Friable Asbestos		✓	W31. DMSA	✓	
W23. Accountable		✓	W26. Classified		✓	W29. TRU Waste		✓			
W24. Carcinogen		✓	W27. Friable Asbestos		✓	W30. CERCLA		✓			

Waste Description / Comments

W32. DMSA 0110826 Zone + 2 EJT 8/29/01
C-310 Internal Component (cone)
old # 331-09-028

with the RFD number, content, appropriate generation date, source location, and at the stated location.

W33. Generation Plan No.	W34. Generator's Signature	Date
	Terri Ross	8/8/01

Handling / Pickup Information (Completed by Waste Management)

P1. Pick-up Site	P2. Pick-up Facility	P3. Pick-up Room/Area

P4. PPE Requirements

P5. Container-Labeling Requirements

___ RCRA	___ PCB	___ DET PCB (<50ppm & source <50ppm)	___ RAD	___ DOE
___ FISSILE	___ NCS EXEMPT	___ RD CONFIDENTIAL	___ ACID	___ USEC
___ FLAMMABLE	___ COMBUSTIBLE	___ OXIDIZER	___ BASE	___ WESKEM
___ ASBESTOS	___ REACTIVE	___ TRANSURANIC	___ NON-HAZ	

P6. Additional Handling Instructions
1) verify labeling
2) barcode
3) verify zone

Reference FWR	
Origin Date	
PCB Start Date	
RCRA Start Date	

Waste Coordinator (Issued By)	Badge	Date	P8. Disposal/Storage Completed By	Badge	Date
Terri Ross	31871	8/8/01	[illegible]	704287	8/10/01

P9. Field Supervisor	Badge	Date	P10. Data Processing Completed By	Badge	Date
Terri Ross Gary [illegible]	34255	8/20/01	[illegible]	705451	8-22-01

P11. Waste Item Information

Waste Item No. 110319
Container No. (Barcode) DMSA 0110826
Weight ~150 lb
Location and Grid 331-09 Zone ~~1~~ 2 EJT 8/29/01
Container Size ~1.0 ft³

P12. Operator Comments
READER #12

ICF-515a (03/01)

DMSA

received
[illegible] 8-22-01

LOW-LEVEL RADIOACTIVE WASTE

DOCUMENT ID NUMBER: 110319

A1. PYROPHORIC MATERIALS -OTHER THAN RADIOACTIVE FORMS OF ISOTOPES	A2 ACTIVE CHELATING AGENTS	A3 TRU RADIOISOTOPES >100 nCi/g	A4. EXPLOSIVE MATERIALS
☐ YES ☒ NO	☐ YES ☒ NO	☐ YES ☒ NO	☐ YES ☒ NO

A5 ETILOGICAL AGENTS	A6. IGNITION SOURCES	A7. FREE LIQUIDS (Unless Wastewater)	A8. RCRA WASTE	A9. TSCA WASTE
☐ YES ☒ NO	☐ YES ☒ NO	☐ YES ☒ NO	☐ YES ☒ NO	☐ YES ☒ NO

A10. WASTE VARIANCE REQUEST NUMBER(S)

ADDITIONAL WASTE CHARACTERISTICS

A11. CHELATING AGENTS	A12. ION EXCHANGE RESINS	A13. DETECTABLE PCB (Concen. And Source <50 ppm)	CONC.	A14. WASTEWATER
☐ YES ☒ NO	☐ YES ☒ NO	☐ YES ☒ NO	ppm	☐ YES ☒ NO

RADIOISOTOPE DETERMINATION METHOD

DOCUMENT TYPE	DOCUMENT NUMBER
R1. ANALYSIS SAMPLE ID NO.	
R2. PROCESS KNOWLEDGE FORM NO.	210

R3. FISSILE CONTENT (Wt% U-235)	R4. GRAMS U-235	R5. NCS EXEMPT	R5. CHEMICAL FORM
		☒ YES ☐ NO	

OTHER SAMPLE ANALYSIS

DOCUMENT TYPE	DOCUMENT NUMBER
01. ANALYSIS SAMPLE ID NO.	
02. PROCESS KNOWLEDGE FORM NO.	

RADIATION DATA FROM HEALTH PHYSICS SURVEY
SURFACE CONTAMINATION (Data Supplied by HP)

R7. HP SURVEY REQUIRED

R8. TRANSFERABLE (Alpha)	R9. FIXED (Alpha)
dpm/100cm2	dpm/100cm2
R10. TRANSFERABLE (Beta/Gamma)	R11. FIXED (Beta/Gamma)
dpm/100cm2	dpm/100cm2

DOSE

MREM/HR	MREM/HR @ METERS (B/G)
R14. HP SIGNATURE	R15. SURVEY NUMBER

WASTE ITEM CONTAINER LOG

10. ITEM/CONTAINER			DOCUMENT ID NUMBER
1 OF 1			110319
11. WASTE ITEM ID NO.	12. ORIGIN DATE	13. RCRA ACCUMULATION START DATE	14. PCB DATE TO STORAGE
110319-01	8/8/01	N/A	N/A

15. WASTE MATERIAL PLACED IN (Or Removed From) CONTAINER	16. QUANTITY	17. DEPOSITOR		18. COMMENTS (If Waste is removed from container, then final disposition must be noted.)
		INITIAL	DATE	
C-310 Internal Component (cone)	1	JR	8/8/01	C-331-09-028

19. CONTAINER ID NO. (Barcode)	110. ABSORBENT MATERIALS?	QUANTITY	TYPE	111. NMC&A FORM	112. EST. NET VOLUME	113. UNITS
DMSA0110826	☐ YES ☐ NO					
114. GROSS WEIGHT	115. UNITS	116. INNER CONTAINER TYPE		117. OUTER CONTAINER TYPE	118. TANK SEAL NUMBER	
119. CONTAINER GENERATOR SIGNATURE: Gene Ross					DATE 8/8/01	

UCN-20700 PAGE 2

DMSA/D&D NCS-Restricted Area Item - NCS Characterization Form

ITEM	INITIAL CHARACTERIZATION	ANALYTICAL CHARACTERIZATION: ^{235}U Assay Analysis	^{235}U Mass Analysis	Subcritical Mass Limits	NDA Quantification Surveys	NCS CLASSIFICATION
Unique ID: RETUS 30 Description: C-310 CONTAINER INTERNAL COMPONENT Independent Confirmations: Individual #1: [illegible] Date: [illegible] individual #2: [illegible] Date: 2-10-01 Other Information: Bldg./Col: C-331-[illegible] DMSA #: 331-09 Origin: [illegible]	Historical Documentation: Process Knowledge: Visual Inspections Completed: ____ External Surfaces Inspection ____ Internal Surfaces Inspection Completed By: Date:	Sample A: % ^{235}U ____ 1 sigma (% ^{235}U) ____ 2 sigma (% ^{235}U) ____ Total (^{235}U + 2 sigma) Sample B: ____ % ^{235}U ____ 1 sigma (% ^{235}U) ____ 2 sigma (% ^{235}U) ____ Total (^{235}U + 2 sigma)	Sample A: ____ g ^{235}U Sample B: ____ g ^{235}U	____ kg ^{235}U ____ Moderated Limits ____ Dry Limits	Sample A: Date & Time Performed: __/__/__ ____ am/pm Date & Time Results Rec'd: __/__/__ ____ am/pm Assumed Assay: ____ % ^{235}U Mass: ____ g ^{235}U Submitted By: Date: Sample B: Date & Time Performed: __/__/__ ____ am/pm Date & Time Results Re[illegible]: __/__/__ ____ am/pm Assumed Assay: ____ % ^{235}U Mass: ____ g ^{235}U Submitted By: Date:	Initial: Reclassification: ✓ NCS-Exempt ____ ____ Spacing Controlled ____ ____ Singularly-Contingent ____ DMSA/DRA Inspector: [illegible] Date: [illegible] NCS Engineer: (If Spacing-Controlled or Singularly-Contingent item is involved) Date: NDA Expert: (if NDA is performed) Date: Independent Verifications: (BEFORE movement) Person #1: Date: Person #2: Date: Independent Verifications: (AFTER movement) Person #1: Date: Person #2: Date:

Comments: NCS EXEMPT

2-1-04

Approved to Relocate: To: _____
Further NCS characterization is required. Item does not contain Singularly-Contingent mass.
NDA Expert #1: _____ Date: _____
NDA Expert #2: _____ Date: _____
DMSA/DRA Inspector: _____ Date: _____
NCS Engineer: _____ Date: _____

I have independently confirmed **the identification and description** for this NCS-Exempt or Spacing-Controlled Item against the written instructions and find this information to match.

Independent Person #1: _____
Date: _____

Independent Person #2: _____
Date: _____

I **have** independently confirmed the **destination** for this NCS-Exempt or Spacing-Controlled Item against the written instructions and find this information to match.

Independent Person #1: _____
Date: _____

Independent Person #2: _____
Date: _____

~~DOE~~ 8-22-01

Request For Disposal

DOE

LLW

RFD

Document ID Number
110320

Generation Process Information (Completed by Generator)

W1. Generator's Name (Print)	W2. Badge No.	W3. Generator's Phone No.	W4. Mail Stop	W5 Charge No. / WC
Terri Ross	31871	5325	C7431	

W6. Generator's Company	W7. Corp Owner	W8. Origin Site	W9. Origin Facility	W10. Origin Area	W11. Rad Area?
WESKEM	DOE	PGDP	C-331	6-331-09	☒ Yes ☐ No

W12. Number of Items	W13. Process Category (GCC)	W14. Process Activity Code	W15. AWA Number	W16. Physical Form
1	LEG	A93	N/A	Solid

W17. Material Type(s)	W18. Holding Site	W19. Holding Facility	W20. Holding Area	W21 RFD Attachment
MT007	PGDP	C-331	C-331-09	☒ A ☐ B ☐ C

Waste Subcategories (Check all that apply)

	Yes	No		Yes	No		Yes	No		Yes	No
W22. Biological		✓	W25. Const. Debris		✓	W28. Non-Friable Asbestos		✓	W31. DMSA	✓	
W23. Accountable		✓	W26. Classified		✓	W29. TRU Waste		✓			
W24. Carcinogen		✓	W27. Friable Asbestos		✓	W30. CERCLA		✓			

Waste Description / Comments

W32. DMSA 0110827 zone 4
21" blank flange
old # 331-09-029

This is to certify that the above named material is properly described and in the stated container, which is in good condition, marked with the RFD number, content, appropriate generation date, source location, and at the stated location.

W33. Generation Plan No.	W34. Generator's Signature	Date
	Terri Ross	8/8/01

Handling / Pickup Information (Completed by Waste Management)

P1. Pick-up Site	P2. Pick-up Facility	P3. Pick-up Room/Area

P4. PPE Requirements

P5. Container-Labeling Requirements

___ RCRA	___ PCB	___ DET PCB (<50ppm & source <50ppm)	___ RAD	___ DOE
___ FISSILE	___ NCS EXEMPT	___ RD CONFIDENTIAL	___ ACID	___ USEC
___ FLAMMABLE	___ COMBUSTIBLE	___ OXIDIZER	___ BASE	___ WESKEM
___ ASBESTOS	___ REACTIVE	___ TRANSURANIC	___ NON-HAZ	

P6. Additional Handling Instructions
1) verify labeling
2) barcode
3) verify zone

Reference FWR
Origin Date
PCB Start Date
RCRA Start Date

P7. Waste Coordinator (Issued By)	Badge	Date	P8. Disposal/Storage Completed By	Badge	Date
Terri Ross	31871	8/8/01	[illegible]	704287	8/9/01

P9. Field Supervisor	Badge	Date	P10. Data Processing Completed By	Badge	Date
Gary Hines	34255	8/20/01	[illegible]	705451	8-22-01

P11. Waste Item Information

Waste Item No. 110320
Container No. (Barcode) DMSA 0110827
Weight ~~4590~~ 100 lbs [illegible] 10/15/01
Location and Grid C-331-09 ZONE 4
Container Size ~~177 ft³~~ .5 ft³ [illegible] 10/15/01

P12. Operator Comments

BJCF-515a (03/01)

DMSA

received
[illegible] 8-22-01

LOW-LEVEL RADIOACTIVE WASTE

ATTACHMENT A

DOCUMENT ID NUMBER: 110320

A1. PYROPHORIC MATERIALS -OTHER THAN RADIOACTIVE FORMS OF ISOTOPES	A2. ACTIVE CHELATING AGENTS	A3 TRU RADIOISOTOPES>100 nCi/g	A4. EXPLOSIVE MATERIALS
☐ YES ☒ NO	☐ YES ☒ NO	☐ YES ☒ NO	☐ YES ☒ No

A5. ETILOGICAL AGENTS	A6. IGNITION SOURCES	A7. FREE LIQUIDS (Unless Wastewater)	A8. RCRA WASTE	A9. TSCA WASTE
☐ YES ☒ NO	☐ YES ☒ NO	☐ YES ☒ NO	☐ YES ☒ NO	☐ YES ☒ NO

A10. WASTE VARIANCE REQUEST NUMBER(S)

☐ YES ☒ NO	☐ YES ☒ NO	☐ YES ☒ NO	ppm ☐ YES ☒ NO

DOCUMENT TYPE	DOCUMENT NUMBER
R1. ANALYSIS SAMPLE ID NO.	
R2. PROCESS KNOWLEDGE FORM NO.	210

R3. FISSILE CONTENT (Wt% U-235)	R4. GRAMS U-235	R5. NCS EXEMPT	R5. CHEMICAL FORM
		☒ YES ☐ NO	

DOCUMENT TYPE	DOCUMENT NUMBER
01. ANALYSIS SAMPLE ID NO.	
02. PROCESS KNOWLEDGE FORM NO.	

R8. TRANSFERABLE (Alpha) dpm/100cm2	R9. FIXED (Alpha) dpm/100cm2
R10. TRANSFERABLE (Beta/Gamma) dpm/100cm2	R11. FIXED (Beta/Gamma) dpm/100cm2
R12. EXTERNAL DOSE/PACKAGE CONTACT MREM/HR	R13. DOSE RATE MREM/HR @ METERS (B/G)
R14. HP SIGNATURE	R15. SURVEY NUMBER

WASTE ITEM CONTAINER LOG

10. ITEM/CONTAINER	OF	DOCUMENT ID NUMBER
1	1	110320

11 WASTE ITEM ID NO	12 ORIGIN DATE	13 RCRA ACCUMULATION START DATE	14 PCB DATE TO STORAGE
110320-01	8/8/01	N/A	N/A

15. WASTE MATERIAL PLACED IN (Or Removed From) CONTAINER	16. QUANTITY	17. DEPOSITOR INITIAL	17. DEPOSITOR DATE	18. COMMENTS (If Waste is removed from container, then final disposition must be noted.)
21" blank flange	1	JR	8/8/01	Old # C331-09-029
				Zone 4

19 CONTAINER ID NO (Barcode)	110 ABSORBENT MATERIALS? QUANTITY TYPE	111 NMC&A FORM	112 EST NET VOLUME	113 UNITS
AMSA0110 827	[ ] YES [N] NO			

114 GROSS WEIGHT	115. UNITS	116. INNER CONTAINER TYPE	117 OUTER CONTAINER TYPE	118 TANK SEAL NUMBER

119 CONTAINER GENERATOR SIGNATURE: Jeri Ross

DATE: 8/8/01

UCN-20700 PAGE 3

DMSA/D&D NCS-Restricted Area Item - NCS Characterization Form

Description: 21 BLANK

Independent Confirmations:
Individual #1: [illegible]
Date: 8/18/01
Individual #2: [illegible]
Date: 8-18-01

Other Information:
Bldg./Col.: C-331-T9/10
DMSA #: [illegible]
Origin: N.A

INITIAL CHARACTERIZATION

Process Knowledge:

Visual Inspections Completed:
____ External Surfaces Inspection
____ Internal Surfaces Inspection

Completed By:

Date:

ANALYTICAL CHARACTERIZATION

^{235}U Assay Analysis

____ 1 sigma (% ^{235}U)
____ 2 sigma (% ^{235}U)
____ Total (^{235}U + 2 sigma)

Sample B:
____ % ^{235}U
____ 1 sigma (% ^{235}U)
____ 2 sigma (% ^{235}U)
____ Total (^{235}U + 2 sigma)

^{235}U Mass Analysis

Sample A:
____ g ^{235}U

Sample B:
____ g ^{235}U

Subcritical Mass Limits

____ Moderated Limits
____ Dry Limits

NDA Quantification Surveys

Sample A:
Date & Time Performed:
___/___/___ ____am/pm
Date & Time Results Rec'd:
___/___/___ ____am/pm
Assumed Assay: ____ % ^{235}U
Mass: ____ g ^{235}U
Submitted By:
Date:

Sample B:
Date & Time Performed:
___/___/___ ____am/pm
Date & Time Results Rec'd:
___/___/___ ____am/pm
Assumed Assay: ____ % ^{235}U
Mass: ____ g ^{235}U
Submitted By:
Date:

NCS CLASSIFICATION

Initial: Reclassification:
✓ NCS-Exempt
____ Spacing-Controlled
____ Singularly-Contingent

DMSA/DRA Inspector: [illegible]
Date: 8/27/01
NCS Engineer:
(If Spacing-Controlled or Singularly-Contingent item is involved)
Date:
NDA (if NDA is performed)
Date:
Verifications (after movement)
Person #1:
Date:
Person #2:
Date:
Independent Verifications (AFTER movement)
Person #1:
Date:
Person #2:
Date:

BY PREVIOUS CHARACTERIZATION (DMSA# 331-09-029)
REFER TO ATTACHED SHEETS FOR DETAILED INFORMATION

Approved to Relocate: To
Further NCS characterization is required. Item does not contain Singularly-Contingent mass.
NDA Expert #1: Date:
NDA Expert #2: Date:
DMSA/DRA Inspector: Date:
NCS Engineer: Date:

I have independently confirmed the identification and description for this NCS-Exempt or Spacing-Controlled Item against the written instructions and find this information to match.
Independent Person #1:
Date:
Independent Person #2:
Date:

I have independently confirmed the destination for this NCS-Exempt or Spacing-Controlled Item against the written instructions and find this information to match.
Independent Person #1:
Date:
Independent Person #2:
Date:

(PA-3003A • Rev 4 - 07 2001)

DOE

Request For Disposal

LLW

RFD

Document ID Number 110451

Generation Process Information (Completed by Generator)

W1. Generator's Name (Print)	W2. Badge No.	W3. Generator's Phone No.	W3. Mail Stop	W5. Charge No. / WO
Terri Ross	31871	5325	C743T2	

W6. Generator's Company	W7. Corp Owner	W8. Origin Site	W9. Origin Facility	W10. Origin Area	W11. Rad Area?
WESKEM	DOE	PGDP	C-331	C-331-09	☒ Yes ☐ No

W12. Number of Items	W13. Process Category (GCC)	W14. Process Activity Code	W15. AWA Number	W16. Physical Form
1	LEG	A93	N/A	Solid

W17. Material Type(s)	W18. Holding Site	W19. Holding Facility	W20. Holding Area	W21 RED Attachment
MT007	PGDP	C-331-G 8/7/01	C-331-09	☒ A ☐ B ☐ C

Waste Subcategories (Check all that apply)

	Yes	No		Yes	No		Yes	No		Yes	No
W22. Biological		✓	W25. Const. Debris		✓	W28. Non-Friable Asbestos		✓	W31. DMSA	✓	
W23. Accountable		✓	W26. Classified		✓	W29. TRU Waste		✓			
W24. Carcinogen		✓	W27. Friable Asbestos		✓	W30. CERCLA		✓			

Waste Description / Comments

W32. C-331-09-001 BC. DMSA 0110801

C-310 converter - C-8254

zone 2

This is to certify that the above named material is properly described and in the stated container, which is in good condition, marked with the RFD number, content, appropriate generation date, source location, and at the stated location.

W33. Generation Plan No.	W34. Generator's Signature	Date
	Terri Ross	8/7/01

Handling / Pickup Information (Completed by Waste Management)

P1. Pick-up Site	P2. Pick-up Facility	P3. Pick-up Room/Area

P4. PPE Requirements

P5. Container-Labeling Requirements

P6. Additional Handling Instructions

Verify labeling, barcode & verify zone

Reference FWR

Origin Date

PCB Start Date

RCRA Start Date

Waste Coordinator (Issued By)	Badge	Date	P8. Disposal/Storage Completed By	Badge	Date
Terri Ross	31871	8/8/01	[illegible]	704290	8/9/01

P9. Field Supervisor	Badge	Date	P10. Data Processing Completed By	Badge	Date
Gary Hines	34255	8/20/01	Carry Wolfe	7051	8-22-01

P11. Waste Item Information

Waste Item No. 110451-01

Container No. (Barcode) 0110801

Weight ~4570 LB

Location and Grid C-331-09 zone 2

Container Size ~177 F

P12. Operator Comments

CF-515a (03/01)

DMSA

received 8-22-01

LOW-LEVEL RADIOACTIVE WASTE

ATTACHMENT A

DOCUMENT ID NUMBER 110451

PROHIBITED ITEMS

A1. PYROPHORIC MATERIALS -OTHER THAN RADIOACTIVE FORMS OF ISOTOPES	A2. ACTIVE CHELATING AGENT:	A3. TRU RADIOISOTOPES >100 nCi/g	A4. EXPLOSIVE MATERIALS
☐ YES ☒ NO	☐ YES ☒ NO	☐ YES ☒ NO	☐ YES ☒ NO

A5. ETILOGICAL AGENTS	A6. IGNITION SOURCES	A7 FREE LIQUIDS (Unless Wastewater)	A8. RCRA WASTE	A9. TSCA WASTE
☐ YES ☒ NO	☐ YES ☒ NO	☐ YES ☒ NO	☐ YES ☒ NO	☐ YES ☒ NO

A10. WASTE VARIANCE REQUEST NUMBER(S)

ADDITIONAL WASTE CHARACTERISTICS

A11. CHELATING AGENTS	A12. ION EXCHANGE RESINS	A13. DETECTABLE PCB (Concen. And Source <50 ppm)	CONC.	A14. WASTEWATER
☐ YES ☒ NO	☐ YES ☒ NO	☐ YES ☒ NO	ppm	☐ YES ☒ NO

DOCUMENT TYPE	DOCUMENT NUMBER
R1. ANALYSIS SAMPLE ID NO.	
R2. PROCESS KNOWLEDGE FORM NO.	210 EJD 8/31/01

R3. FISSILE CONTENT (Wt% U-235)	R4. GRAMS U-235	R5. NCS EXEMPT	R5. CHEMICAL FORM
		☒ YES ☑ NO	

DOCUMENT TYPE	DOCUMENT NUMBER
01. ANALYSIS SAMPLE ID NO.	
02. PROCESS KNOWLEDGE FORM NO.	

RADIATION DATA FROM HEALTH PHYSICS SURVEY SURFACE CONTAMINATION (Data Supplied by HP)

R7. HP SURVEY REQUIRED

☐ YES ☐ NO

R8. TRANSFERABLE (Alpha) dpm/100cm2	R9. FIXED (Alpha) dpm/100cm2
R10. TRANSFERABLE (Beta/Gamma) dpm/100cm2	R11. FIXED (Beta/Gamma) dpm/100cm2
R12. EXTERNAL DOSE/PACKAGE CONTACT MREM/HR	R13. DOSE RATE MREM/HR @ METERS (B/G)
R14. HP SIGNATURE	R15. SURVEY NUMBER

WASTE ITEM CONTAINER LOG

10. ITEMICONTAINER 1 OF 1			DOCUMENT ID NUMBER 110451
11 WASTE ITEM ID NO 110451-01	12 ORIGIN DATE 8/7/01	13 RCRA ACCUMULATION START DATE N/A	14 PCB DATE TO STORAGE N/A

15. WASTE MATERIAL PLACED IN (Or Removed From) CONTAINER	16. QUANTITY	17. DEPOSITOR INITIAL	17. DEPOSITOR DATE	18. COMMENTS (If Waste is removed from container, then final disposition must be noted.)
C-310 Converter	1	JR	8/7/01	C-331-09-001 Zone 2

19 CONTAINER ID NO (Barcode) MSA0110801	110 ABSORBENT MATERIALS? QUANTITY TYPE [ ] YES [X] NO		111 NMC&A FORM	112 EST NET VOLUME	113 UNITS
114 GROSS WEIGHT	115 UNITS	116. INNER CONTAINER TYPE	117 OUTER CONTAINER TYPE	118 TANK SEAL NUMBER	
119 CONTAINER GENERATOR SIGNATURE [signature]				DATE 8/7/01	

UCN 20700 PAGE 2

DMSA/D&D NCS-Restricted Area Item - NCS Characterization Form

ITEM	INITIAL CHARACTERIZATION	ANALYTICAL CHARACTERIZATION: U Assay Analysis	ANALYTICAL CHARACTERIZATION: ^{235}U Mass Analysis	ANALYTICAL CHARACTERIZATION: Subcritical Mass Limits	ANALYTICAL CHARACTERIZATION: NDA Quantification Survey	NCS CLASSIFICATION
Unique ID #: RFD 110451 Description: C-310 CONVERTER C-8254 Independent Confirmations: Individual #1: [illegible] Date: 8/7/01 Other Information: Bldg./Col.: C-331-S/T-10 Origin: NA	Historical Documentation: Process Knowledge: Visual Inspections Completed: External Surfaces Inspection Internal Surfaces Inspection	Sample A: % ^{235}U 1 sigma (% ^{235}U) 2 sigma (% ^{235}U) Total (^{235}U + 2 sigma) Sample B: % ^{235}U 1 sigma (% ^{235}U) 2 sigma (% ^{235}U) Total (^{235}U + 2 sigma)	Sample A: g ^{235}U Sample B:	Moderated Limits Dry Limits	Sample A: Date & Time Performed: ___/___/___ ___am/pm Date & Time Results Rec'd: ___/___/___ ___am/pm Assumed Assay: ___ % ^{235}U Submitted By: Date, Sample B: Date & Time Performed ___/___/___ ___am/pm Date & Time Results Rec'd: ___/___/___ ___am/pm Assumed Assay: ___ % ^{235}U Mass: Submitted By: Date:	Initial: Reclassification: NCS-Exempt ✓ Spacing-Controlled Singularly-Contingent DMSA DRA Inspector: [illegible] Date 8/7/01 NCS Engineer: (if Spacing-Controlled or Singularly-Contingent item is involved) Date: Date: Independent Verifications: (BEFORE movement) Person #1: Date Person #2: Date Independent Verifications Person #1: Date Person #2: Date

Comments: SPACING CONTROL BY PREVIOUS CHARACTERIZATION (DMSA# C-331-C9-C01)
REFER TO ATTACHED SHEETS FOR DETAILED INFORMATION
ALSO REFER TO NCSE-RM-PGDP-0002RC FOR ADDITIONAL INFORMATION.

Approved to Relocate: To _____
Further NCS characterization is required. Item does not contain Singularly-Contingent mass.
NDA Expert #1: _____ Date: _____
NDA Expert #2: _____ Date: _____
DMSA/DRA Inspector: _____ Date: _____
NCS Engineer: _____ Date: _____

I have independently confirmed the identification and description for this NCS-Exempt or Spacing-Controlled Item against the written instructions and find this information to match.

Independent Person #1: _____
Date: _____

Independent Person #2: _____
Date: _____

I have independently confirmed the destination for this NCS-Exempt or Spacing-Controlled Item against the written instructions and find this information to match.

Independent Person #1: _____
Date: _____

Independent Person #2: _____
Date: _____

LLW DOE LLW RFD

Request For Disposal

Document ID Number 110452

Generation Process Information (Completed by Generator)

W2. Badge No.	W3. Generator's Phone No.	W3. Mail Stop	W5. Charge No. / WO
31871	5325	C743T2	

W8. Origin Site	W9. Origin Facility	W10. Origin Area	W11. Rad Area?
PGDP	C-331	C-331-09	☑ Yes ☐ No

W12. Number of Items	W13. Process Category (GCC)	W14. Process Activity Code	W15. AWA Number	W16. Physical Form
7	LEG	A93	N/A	Solid

W17. Material Type(s)	W18. Holding Site	W19. Holding Facility	W20. Holding Area	W21 RFD Attachment
MT007	PGDP	C-331	C-331-09	☑ A ☐ B ☐ C

Waste Subcategories (Check all that apply)

	Yes	No		Yes	No		Yes	No		Yes	No
W22. Biological		✓	W25. Const. Debris		✓	W28. Non-Friable Asbestos		✓	W31. DMSA	✓	
W23. Accountable		✓	W26. Classified		✓	W29. TRU Waste		✓			
W24. Carcinogen		✓	W27. Friable Asbestos		✓	W30. CERCLA		✓			

Waste Description / Comments

W32

DMSA 0110802 zone ~~X~~ 6 EJT 8/29/01

C-310 Converter C-8257

DMSA C-331-09-004

This is to certify that the above named material is properly described and in the stated container, which is in good condition, marked with the RFD number, content, appropriate generation date, source location, and at the stated location.

W33. Generation Plan No.	W34. Generator's Signature	Date
	Denis Ross	8/7/01

Handling / Pickup Information (Completed by Waste Management)

P1. Pick-up Site	P2. Pick-up Facility	P3. Pick-up Room/Area

P4. PPE Requirements

P5. Container-Labeling Requirements

P6. Additional Handling Instructions

Verify labeling, barcode verify zone

Reference	FWR
Origin Date	
PCB Start Date	
RCRA Start Date	

P7. Waste Coordinator (Issued By)	Badge	Date	P8. Disposal/Storage Completed By	Badge	Date
Denis Ross	31871	8/8/01	[illegible]	704287	8/9/01

P9. Field Supervisor	Badge	Date	P10. Data Processing Completed By	Badge	Date
Gary Hines	34255	8/20/01	Chris Walker	705457	8-22-01

P11. Waste Item Information

Waste Item No. 110452

Container No. (Barcode) DMSA 0110802

Weight ~ 4570 LB

Location and Grid C-331-09 ZONE ~~X~~ 6 EJT 8/29/01

Container Size ~ 177 FT³

P12. Operator Comments

BJCF-515a (03/01)

DMSA

received 8-22-01

LOW-LEVEL RADIOACTIVE WASTE

ATTACHMENT A

DOCUMENTIDNUMBER 110452

A1. PYROPHORIC MATERIALS -OTHER THAN RADIOACTIVE FORMS OF ISOTOPES	A2. ACTIVE CHELATING AGENTS	A3. TRU RADIOISOTOPES >100 nCi/g	A4. EXPLOSIVE MATERIALS
☐ YES ☒ NO	☐ YES ☒ NO	☐ YES ☒ NO	☐ YES ☒ NO

A5. ETILOGICAL AGENTS	A6. IGNITION SOURCES	A7. FREE LIQUIDS	A8. RCRA WASTE	A9. TSCA WASTE
☐ YES ☒ NO	☐ YES ☒ NO	☐ YES ☒ NO	☐ YES ☒ NO	☐ YES ☒ NO

A10. WASTE VARIANCE REQUEST NUMBER(S)

ADDITIONAL WASTE CHARACTERISTICS

A11. CHELATING AGENTS	A12. ION EXCHANGE RESINS	A13. DETECTABLE PCB (Concen. And Source <50 ppm)	CONC.	A14. WASTEWATER
☐ YES ☒ NO	☐ YES ☒ NO	☐ YES ☒ NO	ppm	☐ YES ☒ NO

DOCUMENT TYPE	DOCUMENT NUMBER
R1. ANALYSIS SAMPLE ID NO.	
R2. PROCESS KNOWLEDGE FORM NO.	210 8/31/01

R3. FISSILE CONTENT (Wt% U-235)	R4. GRAMS U-235	R5. NCS EXEMPT	R6. CHEMICAL FORM
		☐ YES ☑ NO	

DOCUMENT TYPE	DOCUMENT NUMBER
O1. ANALYSIS SAMPLE ID NO.	
02. PROCESS KNOWLEDGE FORM NO.	

R8. TRANSFERABLE (Alpha)	R9. FIXED (Alpha)
dpm/100cm2	dpm/100cm2
R10. TRANSFERABLE (Beta/Gamma)	R11. FIXED (Beta/Gamma)
dpm/100cm2	dpm/100cm2

MREM/HA	MREM/HR @ METERS (B/G)
R14. HP SIGNATURE	R15. SURVEY NUMBER

WASTE ITEM CONTAINER LOG

10. ITEM/CONTAINER	OF	DOCUMENT ID NUMBER
1	1	110452

11 WASTE ITEM ID NO	12 ORIGIN DATE	13 RCRA ACCUMULATION START DATE	14 PCB DATE TO STORAGE
110452-01	8/7/01	N/A	N/A

15. WASTE MATERIAL PLACED IN (Or Removed From) CONTAINER	16. QUANTITY	17. DEPOSITOR INITIAL	17. DEPOSITOR DATE	18. COMMENTS (If Waste *is* removed from container, then final disposition must be noted.)
C 310 Converter	1	JR	8/7/01	C-331-09-004
C-8257				Zone X 6 EST 8/29/01

19 CONTAINER ID NO (Barcode)	110 ABSORBENT MATERIALS? QUANTITY TYPE	111 NMC&A FORM	112 EST NET VOLUME	113 UNITS
DMSA0110802	☐ YES ☒ NO			

114 GROSS WEIGHT	115 UNITS	116 INNER CONTAINER TYPE	117 OUTER CONTAINER TYPE	118 TANK SEAL NUMBER

119 CONTAINER GENERATOR SIGNATURE: Dave Rosso

DATE: 8/7/01

UCN-20700 PAGE 2

DMSA/D&D NCS-Restricted Area Item - NCS Characterization Form

ITEM	INITIAL CHARACTERIZATION	ANALYTICAL CHARACTERIZATION: ^{235}U Assay Analysis	^{235}U Mass Analysis	Subcritical Mass Limits	NDA Quantification Surveys	NCS CLASSIFICATION
Unique ID #: REDUCER Description: 310 CONCENTER -8457 Independent Confirmations: Individual #1: [illegible] Date: 8/7/01 Individual #2: [illegible] Date: 8-8-01 . . . . . . **Other Information:** Bldg./Col.: C-331 - W10 DMSA #: 331-9 Origin: N/A	Historical Documentation: Process Knowledge: **Visual Inspections Completed:** ____ External Surfaces Inspection ____ Internal Surfaces Inspection Completed By: ____ Date: ____	Sample A: ____ % ^{235}U ____ 1 sigma (% ^{235}U) ____ 2 sigma (% ^{235}U) ____ Total (^{235}U + 2 sigma) Sample B: ____ % ^{235}U ____ 1 sigma (% ^{235}U) ____ 2 sigma (% ^{235}U) ____ Total (^{235}U + 2 sigma)	Sample A: ____ g ^{235}U Sample B: ____ g ^{235}U	____ kg ^{235}U ____ Moderated Limits ____ Dry Limits	Sample A: Date & Time Performed: __/__/__ ____ am/pm Date & Time Results Rec'd: __/__/__ ____ am/pm Assumed Assay: ____ % ^{235}U Mass: ____ g ^{235}U Submitted By: ____ Date: ____ Sample B: Date & Time Performed: __/__/__ ____ am/pm Date & Time Results Rec'd: __/__/__ ____ am/pm Assumed Assay: ____ % ^{235}U Mass: ____ g ^{235}U Submitted By: ____ Date: ____	Initial: Reclassification: ____ NCS-Exempt ____ ✓ Spacing-Controlled ____ ____ Singularly-Contingent ____ DMSA/DRA Inspector: [illegible] Date: 8/7/01 NCS Engineer: ____ (if Spacing-Controlled or Singularly-Contingent item is involved) Date: ____ NDA Expert: ____ (if NDA is performed) Date: ____ **Independent Verifications:** **(BEFORE movement)** Person #1: ____ Date: ____ Person #2: ____ Date: ____ **Independent Verifications:** **(AFTER movement)** Person #1: ____ Date: ____ Person #2: ____ Date: ____

Comments: SPACING CONTROL BY PREVIOUS CHARACTERIZATION (DMSA# 331-09-004)
REFER TO ATTACHED SHEETS FOR DETAILED INFORMATION
ALSO REFER TO NCSE-RM-PGDP-0002 R0 FOR ADDITIONAL INFORMATION

Approved to Relocate: To ____
Further NCS characterization is required. Item does not contain Singularly-Contingent mass
NDA Expert #1: ____ Date: ____
NDA Expert #2: ____ Date: ____
DMSA/DRA Inspector: ____ Date: ____
NCS Engineer: ____ Date: ____

I have independently confirmed the identification and description for this NCS-Exempt or Spacing-Controlled Item against the written instructions and find this information to match.

Independent Person #1: ____
Date: ____

Independent Person #2: ____
Date: ____

I have independently confirmed the destination for this NCS-Exempt or Spacing-Controlled Item against the written instructions and find this information to match.

Independent Person #1: ____
Date: ____

Independent Person #2: ____
Date: ____

(PA-3003A - Rev 4 - 07 2001)

DOE LLW RFD

Request For Disposal

Document ID Number 110453

Generation Process Information (Completed by Generator)

W1. Generator's Name (Print)	W2. Badge No.	W3. Generator's Phone No.	W3. Mail Stop	W5. Charge No. / WO
Terri Ross	31871	5325	C743T2	

W6. Generator's Company	W7. Corp Owner	W8. Origin Site	W9. Origin Facility	W10. Origin Area	W11. Rad Area?
WESKEM	DOE	PGDP	C-331	C-331-09	☒ Yes ☐ No

W12. Number of Items	W13. Process Category (GCC)	W14. Process Activity Code	W15. AWA Number	W16. Physical Form
1	LEG	A93	N/A	Solid

W17. Material Type(s)	W18. Holding Site	W19. Holding Facility	W20. Holding Area	W21 RFD Attachment
MT007	PGDP	C-331	C-331-09	☒ A ☐ B ☐ C

Waste Subcategories (Check all that apply)

	Yes	No		Yes	No		Yes	No		Yes	No
W22. Biological		✓	W25. Const. Debris		✓	W28. Non-Friable Asbestos		✓	W31. DMSA	✓	
W23. Accountable		✓	W26. Classified		✓	W29. TRU Waste		✓			
W24. Carcinogen		✓	W27. Friable Asbestos		✓	W30. CERCLA		✓			

Waste Description / Comments

W32. DMSA 0110803
C-310 Converter C-8255 zone X6 EJT 8/29/01
DMSA C331-09-005

properly described and in the stated container, which is in good condition, marked with the RFD number, content, appropriate generation date, source location, and at the stated location.

W33. Generation Plan No.	W34. Generator's Signature	Date
	Terri Ross	8/7/01

Handling / Pickup Information (Completed by Waste Management)

P1. Pick-up Site	P2. Pick-up Facility	P3. Pick-up Room/Area

P4. PPE Requirements

P5. Container-Labeling Requirements

P6. Additional Handling Instructions
Verify labeling, barcode & verify zone

Reference FWR
Origin Date
PCB Start Date
RCRA Start Date

P7. Waste Coordinator (Issued By)	Badge	Date	P8. Disposal/Storage Completed By	Badge	Date
Terri Ross	31871	8/8/01	Stan Collier	704287	8/9/01

P9. Field Supervisor	Badge	Date	P10. Data Processing Completed By	Badge	Date
Gary Hines	3435	8/20/01	Clay Waller	705451	8-22-01

P11. Waste Item Information

Waste Item No. 110453
Container No. (Barcode) DMSA0110803
Weight ~4570 lb.
Location and Grid C-331-09 ZONE X6 EJT 8/29/01
Container Size ~177 ft3

P12. Operator Comments

BJCF-515a (03/01)

DMSA

received 8-22-01

LOW-LEVEL RADIOACTIVE WASTE

DOCUMENT ID NUMBER 110453

A1. PYROPHORIC MATERIALS -OTHER THAN RADIOACTIVE FORMS OF ISOTOPES ☐ YES ☒ NO	A2. ACTIVE CHELATING AGENTS ☐ YES ☒ NO	A3. TRU RADIOISOTOPES >100 nCi/g ☐ YES ~~NO~~	A4. EXPLOSIVE MATERIALS ☐
A5. ETILOGICAL AGENTS ☐ ~~YES~~ ☒ NO	A6. IGNITION SOURCES ☐ YES ☒ NO	A7. FREE LIQUIDS (Unless Wastewater) ☐ YES ☒ NO	A8. RCRA WASTE ☐ YES ☒ NO / A9. TSCA WASTE ☐ YES ☒ NO

A11. CHELATING AGENTS ☐ YES ☒ NO	A12. ION EXCHANGE RESINS ☐ YES ☒ NO	A13. DETECTABLE PCB (Concen. And Source <50 ppm) ☐ YES ☒ NO	CONC. ppm / A14. WASTEWATER ☐ YES ☒ N

DOCUMENT TYPE	DOCUMENT NUMBER	
R1. ANALYSIS SAMPLE ID NO.		
R2. PROCESS KNOWLEDGE FORM NO.	210 8/31/01	
R3. FISSILE CONTENT (Wt% U-235)	R4. GRAMS U-235 / R5. NCS EXEMPT ☒ YES ☑ NO	R5. CHEMICAL FC

DOCUMENT TYPE	DOCUMENT NUMBER
01. ANALYSIS SAMPLE ID NO.	
02. PROCESS KNOWLEDGE FORM NO.	

RADIATION DATA FROM HEALTH PHYSICS SURVEY
SURFACE CONTAMINATION (Data Supplied by HP)

R7. HP SURVEY REQUIRED ☐ YES ☐ NO

R8. TRANSFERABLE (Alpha) dpm/100cm2	R9. FIXED (Alpha) dpm/100cm2
R10. TRANSFERABLE (Beta/Gamma) dpm/100cm2	R11. FIXED (Beta/Gamma) dpm/100cm2
R12. EXTERNAL DOSE/PACKAGE CONTACT MREM/HR	R13. DOSE RATE MREM/HR @ METERS (B/G)
R14. HP SIGNATURE	R15. SURVEY NUMBER

WASTE ITEM CONTAINER LOG

10. ITEM/CONTAINER		DOCUMENT ID NUMBER
1 OF 1		110453

11. WASTE ITEM ID NO.	12. ORIGIN DATE	13. RCRA ACCUMULATION START DATE	14. PCB DATE TO STORAGE
110453-01	8/7/01	N/A	N/A

15. WASTE MATERIAL PLACED IN (Or Removed From) CONTAINER	16. QUANTITY	17. DEPOSITOR INITIAL	17. DEPOSITOR DATE	18. COMMENTS (If Waste is removed from container, then final disposition must be noted.)
C-310 Converter	1	JR	8/7/01	C-331-09-005
				zone X 6 EST 8/29/01

19. CONTAINER ID NO. (Barcode)	110. ABSORBENT MATERIALS?	QUANTITY	TYPE	111. NMC&A FORM	112. EST. NET VOLUME	113. UNITS
DMSA0110803	[ ] YES [X] NO					

114. GROSS WEIGHT	115. UNITS	116. INNER CONTAINER TYPE	117. OUTER CONTAINER TYPE	118. TANK SEAL NUMBER

119. CONTAINER GENERATOR SIGNATURE: Drew Ross DATE: 8/7/01

UCN-20700 PAGE 2

DMSA/D&D NCS-Restricted Area Item - NCS Characterization Form

ITEM	INITIAL CHARACTERIZATION	ANALYTICAL CHARACTERIZATION: ^{235}U Assay Analysis	^{235}U Mass Analysis	Subcritical Mass Limits	NDA Quantification Surveys	NCS CLASSIFICATION
Unique ID # RFD.1C453 Description: C-310 CONVERTER C-8255	Historical Documentation: _____	Sample A: ____ % ^{235}U ____ 1 sigma (% ^{235}U) ____ 2 sigma (% ^{235}U) ____ Total (^{235}U + 2 sigma)	Sample A:	____ kg ^{235}U ____ Moderated Limits ____ Dry Limits	Sample A: Date & Time Performed: ___/___/___ ____ am/pm Date & Time Results Rec'd: ___/___/___ ____ am/pm Assumed Assay: ____ % ^{235}U Submitted By: _____ Date: _____	Initial: Reclassification: ____ NCS-Exempt ✓ Spacing-Controlled ____ Singularly-Contingent DMSA/DRA Inspector: [signature] Date: 8/27/01 NCS Engineer: _____ (if Spacing Controlled or Singularly-Contingent item is involved) Date: _____ NDA Expert: _____ (if NDA is performed) Date: _____
Independent Confirmations: Individual #1: [signature] Date: 8/27/01	Process Knowledge: _____	Sample B: ____ % ^{235}U ____ 1 sigma (% ^{235}U) ____ 2 sigma (% ^{235}U) ____ Total (^{235}U + 2 sigma)	Sample B: ____ g ^{235}U		Sample B: Date & Time Performed: ___/___/___ ____ am/pm Date & Time Results Rec'd: ___/___/___ ____ am/pm Assumed Assay: ____ % ^{235}U Mass: ____ g ^{235}U Submitted By: _____ Date:	Independent Verifications: (BEFORE movement) Person #1: _____ Date: _____ Person #2: _____ Date: _____ Independent Verifications: (AFTER movement) Person #1: _____ Date: _____ Date: _____
Other Information: Bldg./Col.: C-331 C/V 10 DMSA #: 331-9 Origin: NA	Visual Inspections Completed: ____ External Surfaces Inspection ____ Internal Surfaces Inspection Completed By: _____ Date: _____					

Comments: SPACING CONTROL BY PREVIOUS CHARACTERIZATION (DMSA# 331-09-0057)
REFER TO ATTACHED SHEETS FOR DETAILED INFORMATION
ALSO REFER TO NCSSE-RM-PGDP-00026 FOR ADDITIONAL INFORMATION

Approved to Relocate: To _____
Further NCS characterization is required. Item does not contain Singularly-Contingent mass.
NDA Expert #1: _____ Date: _____
NDA Expert #2: _____ Date: _____

NCS Engineer: _____ Date: _____

I have independently confirmed the identification and description for this NCS-Exempt or Spacing-Controlled Item against the written instructions and find this information to match.

Independent Person #1: _____
Date:

Independent Person #2: _____
Date: _____

I have independently confirmed the destination for this NCS-Exempt or Spacing-Controlled Item against the written instructions and find this information to match.

Independent Person #1: _____
Date: _____

Independent Person #2: _____
Date: _____

DOE

LLW

RFD

Request For Disposal

Document ID Number
110454

W1. Generator's Name (Print)	W2. Badge No.	W3. Generator's Phone No.	W3. Mail Stop	W5. Charge No. / WO
Terri Ross	31871	5325	C743T2	

W6. Generator's Company	W7. Corp Owner	W8. Origin Site	W9. Origin Facility	W10. Origin Area	W11. Rad Area?
WESKEM	DOE	~~C-331~~ PGDP	C-331	C-331-09	☒ Yes ☐ No

W12. Number of Items	W13. Process Category (GCC)	W14. Process Activity Code	W15. AWA Number	W16. Physical Form
1	LEG	A93	N/A	Solid

W17. Material Type(s)	W18. Holding Site	W19. Holding Facility	W20. Holding Area	W21 RFD Attachment
MT007	PGDP	C-331	C-331-09	☒ A ☐ B ☐ C

Waste Subcategories (Check all that apply)

	Yes	No		Yes	No		Yes	No		Yes	No
W22. Biological		✓	W25. Const. Debris		✓	W28. Non-Friable Asbestos		✓	W31. DMSA	✓	
W23. Accountable		✓	W26. Classified		✓	W29. TRU Waste		✓			
W24. Carcinogen		✓	W27. Friable Asbestos		✓	W30. CERCLA		✓			

Waste Description / Comments

W32. DMSA 0110804 zone 16 EJT 8/29/01
C-310 converter C-47452
DMSA C-331-09-006

This is to certify that the above named material is properly described and in the stated container, which is in good condition, marked with the RFD number, content, appropriate generation date, source location, and at the stated location.

W33. Generation Plan No.	W34. Generator's Signature	Date
	Terri Ross	8/7/01

Handling / Pickup Information (Completed by Waste Management)

P1. Pick-up Site	P2. Pick-up Facility	P3. Pick-up Room/Area

P4. PPE Requirements

P5. Container-Labeling Requirements

___ RCRA	___ PCB	___ DET PCB (<50ppm & source <50ppm)	___ RAD	___ DOE
___ FISSILE	___ NCS EXEMPT	___ RD CONFIDENTIAL	___ ACID	___ USEC
___ FLAMMABLE	___ COMBUSTIBLE	___ OXIDIZER	___ BASE	___ WESKEM
___ ASBESTOS	___ REACTIVE	___ TRANSURANIC	___ NON-HAZ	

P6. Additional Handling Instructions
Verify labeling, barcode & verify zone

Reference FWR	
Origin Date	
PCB Start Date	
RCRA Start Date	

P7. Waste Coordinator (Issued By)	Badge	Date	P8. Disposal/Storage Completed By	Badge	Date
Terri Ross	31871	8/8/01	[illegible]	704287	8/9/01

P9. Field Supervisor	Badge	Date	P10. Data Processing Completed By	Badge	Date
Gary Hines	34255	8/20/01	Clay Walker	705451	8-22-01

P11. Waste Item Information

Waste Item No. 110454
Container No. (Barcode) DMSA 0110804
Weight ~4570 LB
Location and Grid C-331-09 Zone 16 EJT 8/29/01
Container Size ~177 FT³

P12. Operator Comments

UCF-515a (03/01)

DMSA

received
CW 8-22-01

LOW-LEVEL RADIOACTIVE WASTE

ATTACHMENT A

DOCUMENT ID NUMBER 110454

-OTHER THAN RADIOACTIVE FORMS OF ISOTOPES ☐ YES ☒ NO	☐ YES ☒ NO	☐ YES ☒ NO	☐ YES ☒ NO
A5. ETILOGICAL AGENTS ☐ YES ☒ NO	A6. IGNITION SOURCES ☐ YES ☒ NO	A7. FREE LIQUIDS (Unless Wastewater) ☐ YES ☒ NO	A8. RCRA WASTE ☐ YES ☒ NO / A9. TSCA WASTE ☐ YES ☒ NO

ADDITIONAL WASTE CHARACTERISTICS

A11. CHELATING AGENTS ☐ YES ☒ NO	A12. ION EXCHANGE RESINS ☐ YES ☒ NO	A13. DETECTABLE PCB (Concert. And Source <50 ppm) ☐ YES ☒ NO	CONC. ppm
			A14. WASTEWATER ☐ YES ☒ NO

DOCUMENT TYPE	DOCUMENTNUMBER
R1. ANALYSIS SAMPLE ID NO.	
R2. PROCESS KNOWLEDGE FORM NO.	210 8/31/01

R3. FISSILE CONTENT (Wt% U-235)	R4. GRAMS U-235	R5. NCS EXEMPT ☒ YES ☑ NO	R5. CHEMICAL FORM

DOCUMENT TYPE	DOCUMENT NUMBER
01. ANALYSIS SAMPLE ID NO.	
02. PROCESS KNOWLEDGE FORM NO.	

RADIATION DATA FROM HEALTH PHYSICS SURVEY SURFACE CONTAMINATION (Data Supplied by HP)

R7. HP SURVEY REQUIRED ☐ YES ☐ NO

R8. TRANSFERABLE (Alpha) dpm/100cm2	R9. FIXED (Alpha) dpm/100cm2
R10. TRANSFERABLE (Beta/Gamma) dpm/100cm2	R11. FIXED (Beta/Gamma) dpm/100cm2
R12. EXTERNAL DOSE/PACKAGE CONTACT MREM/HR	R13. DOSE RATE MREM/HR @ METERS (B/G)
R14. HP SIGNATURE	R15. SURVEY NUMBER

WASTE ITEM CONTAINER LOG

1 OF 1

11 WASTE ITEM ID NO	12 ORIGIN DATE	13 RCAA ACCUMULATION START DATE	14 PCB DATE TO STORAGE
110454-01	8-7-01	N/A	NA

15. WASTE MATERIAL PLACED IN (Or Removed From) CONTAINER	16. QUANTITY	17. DEPOSITOR INITIAL	17. DEPOSITOR DATE	18. COMMENTS (If Waste is removed from container, then final disposition must be noted.)
C-310 converter C-47452	1	JR	8/7/01	C-331-09-0216 gone X6 8/29/01

19 CONTAINER ID NO (Barcode)	110 ABSORBENT MATERIALS? QUANTITY TYPE	111 NMC&A FORM	112 EST NET VOLUME	113 UNITS
MSA0110804	YES NO			

114 GROSS WEIGHT	115 UNITS	116 INNER CONTAINER TYPE	117 OUTER CONTAINER TYPE	118 TANK SEAL NUMBER

119 CONTAINER GENERATOR SIGNATURE: Ellen Rosa

DATE: 8/7/01

UCN-20700 PAGE 3

DMSA/D&D NCS-Restricted Area Item - NCS Characterization Form

Unique ID #: RED 11CAA-A

C 47452

Independent Confirmations:
Individual #1: [illegible]
Date: 5/7/01
Individual #2: [illegible]
Date: 5-10-01

Other Information:
Bldg./Col: 231-4/9
DMSA #: 331-9

INITIAL CHARACTERIZATION

Historical Documentation: _____

Process Knowledge: _____

____ External Surfaces Inspection
____ Internal Surfaces Inspection

Date: _____

ANALYTICAL CHARACTERIZATION

^{235}U Assay Analysis

Sample A:
____ % ^{235}U
____ 1 sigma (% ^{235}U)
____ 2 sigma (% ^{235}U)
____ Total (^{235}U + 2 sigma)

Sample B:
____ % ^{235}U
____ 1 sigma (% ^{235}U)
____ 2 sigma (% ^{235}U)
____ Total (^{235}U + 2 sigma)

^{235}U Mass Analysis

Sample A:
____ g %

Sample B:
____ g ^{235}U

Subcritical Mass Limits

____ Moderated Limits
____ Dry Limits

NDA Quantification Surveys

Sample A:
Date & Time Performed: __/__/__ ____ am/pm
Date & Time Results Rec'd: __/__/__ ____ am/pm
Assumed Assay: ____ % ^{235}U
____ g ^{235}U
Submitted By: _____
Date:

Sample B:
Date & Time Performed: __/__/__ ____ am/pm
Date & Time Results Rec'd: __/__/__ ____ am/pm
Assumed Assay: ____ % ^{235}U
Mass: ____ g ^{235}U
Submitted By: _____
Date:

NCS CLASSIFICATION

Initial: Reclassification:
____ NCS-Exempt
____ ✓ Spacing-Controlled
____ Singularly-Contingent

DMSA/DRA Inspector: [illegible]
Date: 5/07/01
NCS Engineer: _____
(If Spacing-Controlled or Singularly-Contingent item is involved)
Date: _____
NDA Expert: _____
(if NDA is performed)
Date: _____

Independent Verifications:
(BEFORE movement)
Person #1: _____
Date: _____
Person #2: _____
Date: _____

Independent Verifications:
(AFTER movement)
Person #1: _____
Date: _____
Person #2: _____
Date: _____

Comments: SPACING CONTROL BY PREVIOUS CHARACTERIZATION (DMSA# 331-09-006)
REFER TO ATTACHED SHEETS FOR DETAILED INFORMATION
ALSO REFER TO NCSS-RM-PGOP-0002R0 FOR ADDITIONAL INFORMATION

Approved to Relocate: To _____
Further NCS characterization is required. Item does not contain Singularly-Contingent mass.
NDA Expert #1: _____ Date: _____
NDA Expert #2: _____ Date: _____
DMSA/DRA Inspector: _____ Date: _____
NCS Engineer: _____ Date: _____

I have independently confirmed the **identification and description** for this NCS-Exempt or Spacing-Controlled Item against the written instructions and find this information to match.
Independent Person #1: _____
Date: _____
Independent Person #2: _____
Date: _____

I have independently confirmed the **destination** for this NCS-Exempt or Spacing-Controlled Item against the written instructions and find this information to match.
Independent Person #1: _____
Date: _____
Independent Person #2: _____
Date: _____

(PA-3003A - Rev. 4 - 07-2001)

DOE
Request For Disposal

LLW

RFD
Document ID Number
110455

Generation Process Information (Completed by Generator)

W1. Generator's Name (Print)	W2. Badge No.	W3. Generator's Phone No.	W3. Mail Stop	W5. Charge No. / W(
Terri Ross	31871	5325	C743T2	

W6. Generator's Company	W7. Corp Owner	W8. Origin Site	W9. Origin Facility	W10. Origin Area	W11. Rad Area?
WESKEM	DOE	PGDP	C-331		

W12. Number of items	W13. Process Category (GCC)	W14. Process Activity Code	W15. AWA Number	W16. Physical Form
1	LEG	A93	N/A	Solid

W17. Material Type(s)	W18. Holding Site	W19. Holding Facility	W20. Holding Area	W21 RFD Attachmer
MT007	PGDP	C-331	C-331.09	☒ A ☐ B ☐ (

Waste Subcategories (Check all that apply)

	Yes	No		Yes	No		Yes	No		Yes	No
W22. Biological		✓	W25. Const. Debris		✓	W28. Non-Friable Asbestos		✓	W31. DMSA	✓	
W23. Accountable		✓	W26. Classified		✓	W29. TRU Waste		✓			
W24. Carcinogen		✓	W27. Friable Asbestos		✓	W30. CERCLA		✓			

Waste Description / Comments

W32. DMSA 0110805
C-310 converter C-8258
DMSA C-331-09-007

zone +6 EST 8/29/01

This is to certify that the above named material is properly described and in the stated container, which is in good condition, markec with the RFD number, content, appropriate generation date, source location, and at the stated location.

W33. Generation Plan No.	W34. Generator's Signature	Date
	Terri Ross	8/7/01

Handling / Pickup Information (Completed by Waste Management)

P1. Pick-up Site	P2. Pick-up Facility	P3. Pick-up Room/Area

4. PPE Requirements

P5. Container-Labeling Requirements

___ RCRA	___ PCB	___ DET PCB (<50ppm & source <50ppm)	___ RAD	___ DOE
___ FISSILE	___ NCS EXEMPT	___ RD CONFIDENTIAL	___ ACID	___ USEC
___ FLAMMABLE	___ COMBUSTIBLE	___ OXIDIZER	___ BASE	___ WESKEM
___ ASBESTOS	___ REACTIVE	___ TRANSURANIC	___ NON-HAZ	

P6. Additional Handling Instructions
Verify labeling, barcode & verify zone

Reference	FWR
Origin Date	
PCB Start Date	
RCRA Start Date	

	Badge	Date		Badge	Date
P7. Waste Coordinator (Issued By) Terri Ross	31871	8/8/01	P8. Disposal/Storage Completed By [illegible]	704287	8/9/01
P9. Field Supervisor Gary Hins	34255	8/20/01	P10. Data Processing Completed By [illegible]	705451	8-22-0

P11. Waste Item Information

Waste Item No. 110455
Container No. (Barcode) DMSA 0110805
Weight ~4570 lb.
Location and Grid C-331-09 ZONE +6 EST 8/29/0
Container Size ~177 ft³

P12. Operator Comments

BJCF-515a (03/01)

DMSA

received
[illegible] 8-22-01

LOW-LEVEL RADIOACTIVE WASTE

ATTACHMENT A

DOCUMENT ID NUMBER: 110455

A1. PYROPHORIC MATERIALS -OTHER THAN RADIOACTIVE FORMS OF ISOTOPES	A2. ACTIVE CHELATING AGENTS	A3. TRU RADIOISOTOPES >100 nCi/g	A4. EXPLOSIVE MATERIALS
☐ YES ☒ NO	☐ YES ☒ NO	☐ YES ☒ NO	☐ YES ☒ NO

A5. ETILOGICAL AGENTS	A6. IGNITION SOURCES	A7. FREE LIQUIDS (Unless Wastewater)	A8. RCRA WASTE	A9. TSCA WASTE
☐ YES ☐ NO	☐ YES ☒ NO	☐ YES ☒ NO	☐ YES ☒ NO	☐ YES ☒ NO

ADDITIONAL WASTE CHARACTERISTICS

A11. CHELATING AGENTS	A12. ION EXCHANGE RESINS	A13. DETECTABLE PCB	A14. WASTEWATER
☐ YES ☒ NO	☐ YES ☒ NO	☐ YES ☒ NO CONC. ppm	☐ YES ☒ NO

DOCUMENT TYPE	DOCUMENT NUMBER
R1. ANALYSIS SAMPLE ID NO.	
R2. PROCESS KNOWLEDGE FORM NO.	210 EJ 8/31/01
R3. FISSILE CONTENT (Wt% U-235)	R4. GRAMS U-235 / R5. NCS EXEMPT ☒ YES ☑ NO / R5. CHEMICAL FORM

DOCUMENT TYPE	DOCUMENT NUMBER
01. ANALYSIS SAMPLE ID NO.	
02. PROCESS KNOWLEDGE FORM NO.	

R8. TRANSFERABLE (Alpha) dpm/100cm2	R9. FIXED (Alpha) dpm/100cm2
R10. TRANSFERABLE (Beta/Gamma) dpm/100cm2	R11. FIXED (Beta/Gamma) dpm/100cm2
MREM/HR	MREM/HR @ METERS (B/G)
R14. HP SIGNATURE	R15. SURVEY NUMBER

WASTE ITEM CONTAINER LOG

I0. ITEM/CONTAINER			DOCUMENT ID NUMBER
1 OF 1			110455
I1. WASTE ITEM ID NO. 110455-01	I2. ORIGIN DATE 8/7/01	I3. RCRA ACCUMULATION START DATE N/A	I4. PCB DATE TO STORAGE N/A

I5. WASTE MATERIAL PLACED IN (Or Removed From) CONTAINER	I6. QUANTITY	I7. DEPOSITOR INITIAL	I7. DEPOSITOR DATE	I8. COMMENTS (If Waste is removed from container, then final disposition must be noted.)
~~C-331 JR 8/7/01~~				
C-310 converter C-8258	1	JR	8/7/01	C-331-09-007 zone 1

I9. CONTAINER ID NO (Barcode)	I10. ABSORBENT MATERIALS?	QUANTITY	TYPE	I11. NMC&A FORM	I12. EST. NET VOLUME	I13. UNITS
DMSA0110805	☐ YES ☐ NO					
I14. GROSS WEIGHT	I15. UNITS	I16. INNER CONTAINER TYPE		I17. OUTER CONTAINER TYPE	I18. TANK SEAL NUMBER	
I19. CONTAINER GENERATOR SIGNATURE Irene Ross					DATE 8/7/01	

UCN-20700 PAGE 2

DMSA/D&D NCS-Restricted Area Item - NCS Characterization Form

ITEM	INITIAL CHARACTERIZATION	ANALYTICAL CHARACTERIZATION: Analysis	ANALYTICAL CHARACTERIZATION: ^{235}U Mass Analysis	ANALYTICAL CHARACTERIZATION: Subcritical Mass Limits	ANALYTICAL CHARACTERIZATION: NDA Quantification Surveys	NCS CLASSIFICATION
Unique ID #: [illegible]	~~Historical Documentation:~~	~~Sample A:~~	~~Sample A:~~	____ kg ^{235}U	**Sample A:**	Initial: / Reclassification:
Description: C-310 CONVERTER C-825-8		____ % ^{235}U		Moderated Limits	Date & Time Performed: ___/___/___ ____ am/pm	____ NCS-Exempt ____ ✓ Spacing-Controlled ____ Singularly-Contingent
		____ 1 sigma			Date & Time Results Rec'd: ___/___/___ ____ am/pm	DMSA/DRA Inspector: [illegible] Date: 8/07/01
	~~Process Knowledge:~~	____ 2 sigma (% ^{235}U)		Dry Limits	Assumed Assay: ____ % ^{235}U	NCS Engineer: ____
Independent Confirmations: Individual #1: [illegible] Date: 8/7/01		____ Total (^{235}U + 2 sigma)	**Sample B:**		Mass: ____ g ^{235}U	(if Spacing-Controlled or Singularly-Contingent item is involved) Date: ____
Individual #2: [illegible] Date: 8-7-01		**Sample B:**	____ g ^{235}U		Submitted By: ____	NDA Expert: ____ (if NDA is performed) Date: ____
Other Information: Bldg./Col.: C-331-U/G	**Visual Inspections Completed:** External Surfaces Inspection	____ % ^{235}U			Date: ____	**Independent Verifications: (BEFORE movement)** Person #1: ____ Date: ____ Person #2: ____ Date: ____
		____ 1 sigma			**Sample B:** Date & Time Performed: ___/___/___ ____ am/pm	
	Completed By: ____	____ 2 sigma (% ^{235}U)			Date & Time Results Rec'd: ___/___/___ ____ am/pm	
Origin: Air	Date: ____	Total			Assumed Assay: ____ % ^{235}U	**Independent Verifications:** Person #1: ____ Date: ____ Person #2: ____ Date: ____
					Mass: ____ g ^{235}U	
		____ 2 sigma)			Submitted By: ____ Date: ____	

Comments: SPACING CONTROL BY PREVIOUS CHARACTERIZATION (DMSA# 331-01-007) REFER TO ATTACHED SHEETS FOR DETAILED INFORMATION ALSO REFER TO NCS-RM-RGDP-CCCZRC FOR ADDITIONAL INFORMATION

Approved to Relocate: To ____ Further NCS characterization is required. Item does not contain Singularly-Contingent mass. NDA Expert #1: ____ Date: ____ NDA Expert #2: ____ Date: ____ DMSA/DRA Inspector: ____ Date: ____ NCS Engineer: ____ Date: ____	I have independently confirmed the **identification and description** for this NCS-Exempt or Spacing-Controlled Item against the written instructions and find this information to match. Independent Person #1: ____ Date: ____ Independent Person #2: ____ Date: ____	I have independently confirmed the **destination** for this NCS-Exempt or Spacing-Controlled Item against the written instructions and find this information to match. Independent Person #1: ____ Date: ____ Independent Person #2: ____ Date: ____

DOE

LLW

RFD

Document ID Number 110456

Request For Disposal

Generation Process Information (Completed by Generator)

W1. Generator's Name (Print)	W2. Badge No.	W3. Generator's Phone No.	W3. Mail Stop	W5. Charge No. / WO
Terri Ross	31871	5325	C-743T2	

W6. Generator's Company	W7. Corp Owner	W8. Origin Site	W9. Origin Facility	W10. Origin Area	W11. Rad Area?
WESKEM	DOE	PGDP	C-331	C-331-09	☒ Yes ☐ No

W12. Number of Items	W13. Process Category (GCC)	W14. Process Activity Code	W15. AWA Number	W16. Physical Form
1	LEG	A93	N/A	Solid

W17. Material Type(s)	W18. Holding Site	W19. Holding Facility	W20. Holding Area	W21 RFD Attachment
MT007	PGDP	C-331	C-331-09	☒ A ☐ B ☐ C

Waste Subcategories (Check all that apply)

	Yes	No		Yes	No		Yes	No		Yes	No
W22. Biological		✓	W25. Const. Debris		✓	W28. Non-Friable Asbestos		✓	W31. DMSA	✓	
W23. Accountable		✓	W26. Classified		✓	W29. TRU Waste		✓			
W24. Carcinogen		✓	W27. Friable Asbestos		✓	W30. CERCLA		✓			

Waste Description / Comments

W32. DMSA 0110806 BC.
C-310 Converter C-8235 zone + A EST 8/29/01
DMSA C-331-09-008

This is to certify that the above named material is properly described and in the stated container, which is in good condition, marked with the RFD number, content, appropriate generation date, source location, and at the stated location.

W33. Generation Plan No.	W34. Generator's Signature	Date
	Terri Ross	8/7/01

Handling / Pickup Information (Completed by Waste Management)

P1. Pick-up Site	P2. Pick-up Facility	P3. Pick-up Room/Area

PPE Requirements

P5. Container-Labeling Requirements

___ RCRA	___ PCB	___ DET PCB (<50ppm & source <50ppm)	___ RAD	___ DOE
___ FISSILE	___ NCS EXEMPT	___ RD CONFIDENTIAL	___ ACID	___ USEC
___ FLAMMABLE	___ COMBUSTIBLE	___ OXIDIZER	___ BASE	___ WESKEM
___ ASBESTOS	___ REACTIVE	___ TRANSURANIC	___ NON-HAZ	

P6. Additional Handling Instructions

Verify labeling, barcode & verify zone

Reference FWR	
Origin Date	
PCB Start Date	
RCRA Start Date	

Waste Coordinator (Issued By)	Badge	Date	P8. Disposal/Storage Completed By	Badge	Date
Terri Ross	31871	8/8/01	[illegible]	704287	8/9/01

Field Supervisor	Badge	Date	P10. Data Processing Completed By	Badge	Date
Gary Hines	34255	8/20/01	[illegible]	705451	8-22-01

P11. Waste Item Information

Waste Item No. 110456
Container No. (Barcode) DMSA 0110806
Weight ~4570 LB
Location and Grid C-331-09 ZONE X4 EST 8/29/01
Container Size ~177 FT 3

P12. Operator Comments

F-515a (03/01)

DMSA

received [illegible] 8-22-01

LOW-LEVEL RADIOACTIVE WASTE

DOCUMENT ID NUMBER 110456

-OTHER THAN RADIOACTIVE FORMS OF ISOTOPES ☐ YES ☒ NO	☐ YES ☒ NO	☐ YES ☒ NO	☐ YES ☒ NO	
A5. ETILOGICAL AGENTS ☐ YES ☒ NO	A6. IGNITION SOURCES ☐ YES ☒ NO	A7. FREE LIQUIDS (Unless Wastewater) ☐ YES ☒ NO	A8. RCRA WASTE ☐ YES ☒ No	A9. TSCA WASTE ☐ YES ☒ NO

ADDITIONAL WASTE CHARACTERISTICS

A11. CHELATING AGENTS ☐ YES ☒ NO	A12. ION EXCHANGE RESINS ☐ YES ☒ NO	A13. DETECTABLE PCB (Concen. And Source <50 ppm) ☐ YES ☒ NO CONC. ppm	A14. WASTEWATER ☐ YES ☒ NO

DOCUMENT TYPE	DOCUMENT NUMBER		
R1. ANALYSIS SAMPLE ID NO.			
R2. PROCESS KNOWLEDGE FORM NO.	210		
R3. FISSILE CONTENT (Wt% U-235)	R4. GRAMS U-235	R5. NCS EXEMPT ☒ YES ☐ NO	R5. CHEMICAL FORM

OTHER SAMPLE ANALYSIS

DOCUMENT TYPE	DOCUMENT NUMBER
O1. ANALYSIS SAMPLE ID NO.	
02. PROCESS KNOWLEDGE FORM NO.	

RADIATION DATA FROM HEALTH PHYSICS SURVEY
SURFACE CONTAMINATION (Data Supplied by HP)

R7. HP SURVEY REQUIRED ☐ YES ☐ NO

R8. TRANSFERABLE (Alpha) dpm/100cm2	R9. FIXED (Alpha) dpm/100cm2
R10. TRANSFERABLE (Beta/Gamma) dpm/100cm2	R11. FIXED (Beta/Gamma) dpm/100cm2
R12. EXTERNAL DOSUPACKAGE CONTACT MREM/HR	R13. DOSE RATE MREM/HR @ METERS (B/G)
R14. HP SIGNATURE	R15. SURVEY NUMBER

WASTE ITEM CONTAINER LOG

10. ITEM/CONTAINER		DOCUMENT ID NUMBER
1 OF 1		10456

11. WASTE ITEM ID NO.	12. ORIGIN DATE	13. RCRA ACCUMULATION START DATE	14. PCB DATE TO STORAGE
10456-01	8/7/01	N/A	N/A

15. WASTE MATERIAL PLACED IN (Or Removed From) CONTAINER	16. QUANTITY	17. DEPOSITOR INITIAL	17. DEPOSITOR DATE	18. COMMENTS (If Waste is removed from container, then final disposition must be noted.)
C-310 Converter	1	JR	8/7/01	C-331-09-008
				Zone 4 EST 8/29/01

19. CONTAINER ID NO. (Barcode)	110. ABSORBENT MATERIALS? QUANTITY TYPE	111. NMC&A FORM	112. EST. NET VOLUME	113. UNITS
DMSA0110806	[ ] YES [ ] NO			

114. GROSS WEIGHT	115. UNITS	116. INNER CONTAINER TYPE	117. OUTER CONTAINER TYPE	118. TANK SEAL NUMBER

119. CONTAINER GENERATOR SIGNATURE: Glen Ross

DATE: 8/7/01

UCN-20700 PAGE 2

DMSA/D&D NCS-Restricted Area Item - NCS Characterization Form

ITEM	INITIAL CHARACTERIZATION	ANALYTICAL CHARACTERIZATION: ^{235}U Assay Analysis	^{235}U Mass Analysis	Subcritical Mass Limits	NDA Quantification Surveys	NCS CLASSIFICATION
Unique ID #: RFD 11C4F5	Historical Documentation:	Sample A:	Sample A:	____ kg ^{235}U	Sample A: Date & Time Performed: ___/___/___ ____ am/pm	Initial: Reclassification:
Description: C-310 CONVERTER C-8235		____ % ^{235}U	____ g ^{235}U	____ Moderated Limits	Date & Time Results Rec'd: ___/___/___ ____ am/pm	✓ NCS-Exempt ____
		____ 1 sigma (% ^{235}U)			Assumed Assay: ____ % ^{235}U	____ Spacing-Controlled ____
		____ 2 sigma (% ^{235}U)		____ Dry Limits	Mass: ____ g ^{235}U	____ Singularly-Contingent ____
Independent Confirmations: Individual #1: [illegible] Date: [illegible]	Process Knowledge:	____ Total (^{235}U + 2 sigma)	Sample B:	X	Submitted By: ____	DMSA/DRA Inspector: [illegible] Date: [illegible]
Individual #2: [illegible] Date: [illegible]		Sample B:	____ g ^{235}U		Date: ____	NCS Engineer: ____ (If Spacing-Controlled or Singularly-Contingent item is involved) Date: ____
Other Information:	Visual Inspections Completed: ____ External Surfaces Inspection ____ Internal Surfaces Inspection	____ % ^{235}U			Sample B: Date & Time Performed: ___/___/___ ____ am/pm	NDA Expert: ____ (if NDA is performed) Date: ____
Bldg./Col.: C-331-09		____ 1 sigma (% ^{235}U)			Date & Time Results Rec'd: ___/___/___ ____ am/pm	Independent Verifications: (BEFORE movement) Person #1: ____ Date: ____ Person #2: ____ Date: ____
DMSA #: 331-09	Completed By: ____	____ 2 sigma (% ^{235}U)			Assumed Assay: ____ % ^{235}U	Independent Verifications: (AFTER movement) Person #1: ____ Date: ____ Person #2: ____ Date: ____
Origin: NA	Date: ____	____ Total (^{235}U + 2 sigma)			Mass: ____ g ^{235}U Submitted By: ____ Date: ____	

Comments: NCS EXEMPT BY PREVIOUS CHARACTERIZATION (DMSA# 331-09-008)

Approved to Relocate: To ____
Further NCS characterization is required. Item does not contain Singularly-Contingent mass.
NDA Expert #1: ____ Date: ____
NDA Expert #2: ____ Date: ____

DMSA/DRA Inspector: ____ Date: ____
NCS Engineer: ____ Date: ____

I have independently confirmed the identification and description for this NCS-Exempt or Spacing-Controlled Item against the written instructions and find this information to match.

Independent Person #1: ____
Date: ____

Independent Person #2: ____
Date: ____

I have independently confirmed the destination for this NCS-Exempt or Spacing-Controlled Item against the written instructions and find this information to match.

Independent Person #1: ____
Date: ____

Independent Person #2: ____
Date: ____

DOE

LW

RFD

Document ID Number 110457

Request For Disposal

Generation Process Information (Completed by Generator)

W1. Generator's Name (Print): Terri Ross	W2. Badge No.: 31871	W3. Generator's Phone No.: 5325	W3. Mail Stop: C743T2	W5. Charge No. / WC
W6. Generator's Company: WESKEM	W7. Corp Owner: DOE	W8. Origin Site: PGDP	W9. Origin Facility: C-331	W10. Origin Area: C-331-09
W11. Rad Area? ☒ Yes ☐ No	W12. Number of Items: 1	W13. Process Category (GCC): LEG	W14. Process Activity Code: A93	W15. AWA Number: N/A
W16. Physical Form: Solid	W17. Material Type(s): MT007	W18. Holding Site: PGDP	W19. Holding Facility: C-331	W20. Holding Area: C-331-09
W21 RFD Attachment ☒ A ☐ B ☐ C				

Waste Subcategories (Check all that apply)

	Yes	No		Yes	No		Yes	No		Yes	No
W22. Biological		✓	W25. Const. Debris		✓	W28. Non-Friable Asbestos		✓	W31. DMSA	✓	
W23. Accountable		✓	W26. Classified		✓	W29. TRU Waste		✓			
W24. Carcinogen		✓	W27. Friable Asbestos		✓	W30. CERCLA		✓			

Waste Description / Comments

W32. DMSA0110807 B.C. zone X4 EST 8/29/01
DMSA C-331-09-009
C-310 Converter C-47450

This is to certify that the above named material is properly described and in the stated container, which is in good condition, marked with the RFD number, content, appropriate generation date, source location, and at the stated location.

W33. Generation Plan No.	W34. Generator's Signature: Terri Ross	Date: 8/7/01

Handling / Pickup Information (Completed by Waste Management)

P1. Pick-up Site	P2. Pick-up Facility	P3. Pick-up Room/Area

P4. PPE Requirements

P5. Container-Labeling Requirements

P6. Additional Handling Instructions: Verify labeling, barcode verify zone

Reference FWR

Origin Date

PCB Start Date

RCRA Start Date

P7. Waste Coordinator (Issued By): Terri Ross	Badge: 31871	Date: 8/8/01	P8. Disposal/Storage Completed By: [illegible]	Badge: 704287	Date: 8/9/01
P9. Field Supervisor: [illegible]	Badge: 34255	Date: 8/20/01	P10. Data Processing Completed By: [illegible]	Badge: 705451	Date: 8-22-01

P12. Operator Comments

Container No. (Barcode) DMSA0110807
Weight ~4570 lb.
Location and Grid C-331-09 zone X4 EST 8/29/01
Container Size ~177 ft3

BJCF-515a (03/01)

DMSA

received 8-22-01

LOW-LEVEL RADIOACTIVE WASTE

ATTACHMENT A

DOCUMENT ID NUMBER: 110457

A1. PYROPHORIC MATERIALS -OTHER THAN RADIOACTIVE FORMS OF ISOTOPES ☐ YES ☒ NO	A2 ACTIVE CHELATING AGENTS ☐ YES ☒ NO	A3. TRU RADIOISOTOPES >100 nCi/g ☐ YES ☒ NO	A4. EXPLOSIVE MATERIALS ☐ YES ☒ NO
A5. ETILOGICAL AGENTS ☐ YES ☒ NO	A6. IGNITION SOURCES ☐ YES ☒ NO	A7. FREE LIQUIDS (Unless Wastewater) ☐ YES ☒ NO	A8. RCRA WASTE ☐ YES ☒ NO / A9. TSCA WASTE ☐ YES ☒ NO

A10. WASTE VARIANCE REQUEST NUMBER(S)

ADDITIONAL WASTE CHARACTERISTICS

A11. CHELATING AGENTS ☐ YES ☒ NO	A12. ION EXCHANGE RESINS ☐ YES ☒ NO	A13. DETECTABLE PCB ☐ YES ☒ NO CONC. ppm	A14. WASTEWATER ☐ YES ☒ NO

RADIOISOTOPE DETERMINATION METHOD

DOCUMENT TYPE	DOCUMENT NUMBER
R1. ANALYSIS SAMPLE ID NO.	
R2. PROCESS KNOWLEDGE FORM NO.	210

R3. FISSILE CONTENT (Wt% U-235)

R4. GRAMS U-235

R5. NCS EXEMPT ☒ YES ☑ NO

R6. CHEMICAL FORM

DOCUMENT TYPE	DOCUMENT NUMBER
01. ANALYSIS SAMPLE ID NO.	
02. PROCESS KNOWLEDGE FORM NO.	

RADIATION DATA FROM HEALTH PHYSICS SURVEY
SURFACE CONTAMINATION (Data Supplied by HP)

R7. HP SURVEY REQUIRED

R8. TRANSFERABLE (Alpha) dpm/100cm2	R9. FIXED (Alpha) dpm/100cm2
R10. TRANSFERABLE (Beta/Gamma) dpm/100cm2	R11. FIXED (Beta/Gamma) dpm/100cm2
R12. EXTERNAL DOSUPACKAGE CONTACT MREM/HR	R13. DOSE RATE MREM/HR @ METERS (B/G)
R14. HP SIGNATURE	R15. SURVEY NUMBER

WASTE ITEM CONTAINER LOG

I0. ITEM/CONTAINER	DOCUMENT ID NUMBER
1 OF 1	110457

I1. WASTE ITEM ID NO.	I2. ORIGIN DATE	I3. RCRA ACCUMULATION START DATE	I4. PCB DATE TO STORAGE
110457-01	8-7-01	N/A	N/A

I5. WASTE MATERIAL PLACED IN (Or Removed From) CONTAINER	I6. QUANTITY	I7. DEPOSITOR INITIAL	I7. DEPOSITOR DATE	I8. COMMENTS (If Waste is removed from container, then final disposition must be noted.)
C-310 Converter	1	JR	8/7/01	C-331-09-009
C-47450				zone 1

I9. CONTAINER ID NO. (Barcode)	I10. ABSORBENT MATERIALS?	QUANTITY	TYPE	I11. NMC&A FORM	I12. EST. NET VOLUME	I13. UNITS
DMSA0110807	[ ] YES [N] NO					

I14. GROSS WEIGHT	I15. UNITS	I16. INNER CONTAINER TYPE	I17. OUTER CONTAINER TYPE	I18. TANK SEAL NUMBER

I19. CONTAINER GENERATOR SIGNATURE: Glen Ross

DATE: 8-7-01

UCN-20700 PAGE 2

DMSA/D&D NCS-Restricted Area Item - NCS Characterization Form

ITEM	INITIAL CHARACTERIZATION	ANALYTICAL CHARACTERIZATION: ^{235}U Assay Analysis	ANALYTICAL CHARACTERIZATION: ^{235}U Mass Analysis	ANALYTICAL CHARACTERIZATION: Subcritical Mass Limits	ANALYTICAL CHARACTERIZATION: NDA Quantification Surveys	NCS CLASSIFICATION
Unique ID #: RFD-K 457 Description: C-310 CONVERTER C-47450 Independent Confirmations: Individual #1: [illegible] Date: 5/1/01 Individual #2: [illegible] Date: [illegible] Other Information: Bldg./Col.: C-331 - T/C DMSA #: 331-09 Origin: NA	Historical Documentation: _____ Process Knowledge: _____ Visual Inspections Completed: ____ External Surfaces Inspection ____ Internal Surfaces Inspection Completed By: _____ Date: _____	Sample A: ____ % ^{235}U ____ 1 sigma (% ^{235}U) ____ 2 sigma (% ^{235}U) ____ Total (^{235}U + 2 sigma) Sample B: ____ % ^{235}U ____ 1 sigma (% ^{235}U) ____ 2 sigma (% ^{235}U) ____ Total (^{235}U + 2 sigma)	Sample A: ____ g ^{235}U Sample B: ____ g ^{235}U	____ kg ^{235}U ____ Moderated Limits ____ Dry Limits	Sample A: Date & Time Performed: __/__/__ ____ am/pm Date & Time Results Rec'd: __/__/__ ____ am/pm Assumed Assay: ____ % ^{235}U Mass: ____ g ^{235}U Submitted By: _____ Date: _____ Sample B: Date & Time Performed: __/__/__ ____ am/pm Date & Time Results Rec'd: __/__/__ ____ am/pm Assumed Assay: ____ % ^{235}U Mass: ____ g ^{235}U Submitted By: _____ Date: _____	Initial: Reclassification: ____ NCS-Exempt ____ __✓__ Spacing-Controlled ____ ____ Singularly-Contingent ____ DMSA/DRA Inspector: [illegible] Date: 03/07/01 NCS Engineer: _____ (if Spacing-Controlled or Singularly-Contingent item is involved) Date: _____ NDA Expert: _____ (if NDA is performed) Date: _____ Independent Verifications: (BEFORE movement) Person #1: _____ Date: _____ Person #2: _____ Date: _____ Independent Verifications: (AFTER movement) Person #1: _____ Date: _____ Person #2: _____ Date: _____

Comments: SPACING CONTROL BY PREVIOUS CHARACTERIZATION (DMSA# 331-09-009)
REFER TO ATTACHED SHEETS FOR DETAILED INFORMATION
ALSO REFER TO NCSE-RM-PGDP-0002 R0 FOR ADDITIONAL INFORMATION

Approved to Relocate: To _____ Further NCS characterization is required. Item does not contain Singularly-Contingent mass. NDA Expert #1: _____ Date: _____ NDA Expert #2: _____ Date: _____ DMSA/DRA Inspector: _____ Date: _____ NCS Engineer: _____ Date: _____	I have independently confirmed the **identification and description** for this NCS-Exempt or Spacing-Controlled Item against the written instructions and find this information to match. Independent Person #1: _____ Date: _____ Independent Person #2: _____ Date: _____	I have independently confirmed the **destination** for this NCS-Exempt or Spacing-Controlled Item against the written instructions and find this information to match. Independent Person #1: _____ Date: _____ Independent Person #2: _____ Date: _____

Request For Disposal

Document ID Nun
110458

Generation Process Information (Completed by Generator)

W1. Generator's Name (Print)	W2. Badge No.	W3. Generator's Phone No.	W3. Mail Stop	W5. Charge No
Terri Ross	31871	5325	C7431	

W6. Generator's Company	W7. Corp Owner	W8. Origin Site	W9. Origin Facility	W10. Origin Area	W11. Rad Area?
WESKEM	DOE	PGDP	C-331	C-331-09	☒ Yes ☐

W12. Number of Items	W13. Process Category (GCC)	W14. Process Activity Code	W15. AWA Number	W16. Physical F
1	LEG	A93	N/A	Solid

W17. Material Type(s)	W18. Holding Site	W19. Holding Facility	W20. Holding Area	W21 RFD Attach
MT007	PGDP	C-331	C-331-09	☒ A ☐ B

Waste Subcategories (Check all that apply)

	Yes	No		Yes	No		Yes	No		Yes
W22. Biological		✓	W25. Const. Debris		✓	W28. Non-Friable Asbestos		✓	W31. DMSA	✓
W23. Accountable		✓	W26. Classified		✓	W29. TRU Waste		✓		
W24. Carcinogen		✓	W27. Friable Asbestos		✓	W30. CERCLA		✓		

Waste Description / Comments

W32. DMSA 0110808
JE 8/8/01 ~~C-301~~ C-310 Converter C-47451
old DMSA # C-331-09-010 ZONE 4 EST 8/29/01

This is to certify that the above named material is properly described and in the stated container, which is in good condition, marked with the RFD number, content, appropriate generation date, source location, and at the stated location.

W33. Generation Plan No	W34. Generator's Signature	Date
	Terri Ross	8/8/01

Handling / Pickup Information (Completed by Waste Management)

P1. Pick-up Site	P2. Pick-up Facility	P3. Pick-up Room/Area

P5. Container-Labeling Requirements

___ RCRA	___ PCB	___ PCB (<50ppm & source <50ppm)	___ RAD	___ DOE
___ FISSILE	___ NCS EXEMPT	___ CONFIDENTIAL	___ ACID	___ USEC
___ FLAMMABLE	___ COMBUSTIBLE	___ OXIDIZER	___ BASE	___ WESKE
___ ASBESTOS	___ REACTIVE	___ TRANSURANIC	___ NON-HAZ	

P6. Additional Handling Instructions

Verify labeling, barcode & verify zone

Reference FWR	
Origin Date	
PCB Start Date	
RCRA Start Date	

P7. Waste Coordinator (Issued By)	Badge	Date	P8. Disposal/Storage Completed By	Badge	Date
Terri Ross	31871	8/8/01	[illegible]	704287	8/9/01
P9. Field Supervisor	Badge	Date	P10. Data Processing Completed By	Badge	Date
C R Taylor	13656	9/4/01	Chy Walker	704 9-4-01	9-04-01

P11. Waste Item Information

P12. Operator Comments 705451

Container No. (Barcode) DMSA 0110808
Weight ~ 4570 LB
Current and Grid C-331-09 ZONE X 4 EST 8/29/01
Container Size ~ 177 FT³

WCF-515a (03/01)

LOW-LEVEL RADIOACTIVE WASTE

ATTACHMENT A

DOCUMENT ID NUMBER 110458

A1 PYROPHORIC MATERIALS -OTHER THAN RADIOACTIVE FORMS OF ISOTOPES ☐ YES ☑ NO	A2. ACTIVE CHELATING AGENTS ☐ YES ☑ NO	A3. TRU RADIOISOTOPES >100 nCi/g ☐ YES ☑ NO	A4. EXPLOSIVE MATERIALS ☐ YES ☑ NO
A5. ETILOGICAL AGENTS ☐ YES ☑ NO	A6. IGNITION SOURCES ☐ YES ☑ NO	A7. FREE LIQUIDS (Unless Wastewater) ☐ YES ☑ NO	A8. RCRA WASTE ☐ YES ☑ NO / A9. TSCA WASTE ☐ YES ☑ NO

A10. WASTE VARIANCE REQUEST NUMBER(S)

ADDITIONAL WASTE CHARACTERISTICS

A11. CHELATING AGENTS ☐ YES ☑ NO	A12. ION EXCHANGE RESINS ☐ YES ☑ NO	A13. DETECTABLE PCB (Concen. And source < 50 ppm) ☐ YES ☑ NO CONC. ppm	A14. WASTEWATER ☐ YES ☑ NO

RADIOISOTOPE DETERMINATION METHOD

DOCUMENT TYPE	DOCUMENT NUMBER
R1. ANALYSIS SAMPLE ID NO.	
R2. PROCESS KNOWLEDGE FORM NO.	210

R3. FISSILE CONTENT (Wt% U-235)	R4. GRAMS U-235	R5. NCS EXEMPT ☐ YES ☑ NO	R5. CHEMICAL FORM

DOCUMENT TYPE	DOCUMENT NUMBER
01. ANALYSIS SAMPLE ID NO.	
02. PROCESS KNOWLEDGE FORM NO.	

RADIATION DATA FROM HEALTH PHYSICS SURVEY
SURFACE CONTAMINATION (Data Supplied by HP)

R7. HP SURVEY REQUIRED

R8. TRANSFERABLE (Alpha) dpm/100cm2	R9. FIXED (Alpha) dpm/100cm2
R10. TRANSFERABLE (Beta/Gamma) dpm/100cm2	R11. FIXED (Beta/Gamma) dpm/100cm2
MREM/HR	MREM/HR @ METERS (B/G)
R14. HP SIGNATURE	R15. SURVEY NUMBER

WASTE ITEM CONTAINER LOG

10. ITEM/CONTAINER	OF	DOCUMENT ID NUMBER
1	1	110458

11. WASTE ITEM ID NO	12. ORIGIN DATE	13. RCRA ACCUMULATION START DATE	14. PCB DATE TO STORAGE
458-01	8/8/01	N/A	N/A

15. WASTE MATERIAL PLACED IN (Or Removed From) CONTAINER	16. QUANTITY	17. DEPOSITOR INITIAL	17. DEPOSITOR DATE	18. COMMENTS (If Waste is removed from container, then final disposition must be noted.)
C-310 CONVERTER	1	JR	8/8/01	C-331-09-~~001~~ 010 EST 8/31/01

19. CONTAINER ID NO. (Barcode)	110 ABSORBENT MATERIALS? [ ] YES [✓] NO	QUANTITY	TYPE	111 NMC&A FORM	112 EST. NET VOLUME	113 UNITS
DMSA 0110808						

114 GROSS WEIGHT	115 UNITS	116 INNER CONTAINER TYPE	117 OUTER CONTAINER TYPE	118 TANK SEAL NUMBER

119 CONTAINER GENERATOR SIGNATURE: Dem Ross

DATE: 8/8/01

UCN-20700 PAGE 2

DMSA/D&D NCS-Restricted Area Item - NCS Characterization Form

ITEM	INITIAL CHARACTERIZATION	ANALYTICAL CHARACTERIZATION: ^{235}U Assay Analysis	ANALYTICAL CHARACTERIZATION: ^{235}U Mass Analysis	ANALYTICAL CHARACTERIZATION: Subcritical Mass Limits	ANALYTICAL CHARACTERIZATION: NDA Quantification Surveys	NCS CLASSIFICATION
Unique ID #: RED 1645-2 Description: C-310 CONVERTER C-4745-1 Independent Confirmations: Individual #1: [illegible] Date: 8/17/01 Individual #2: [illegible] Other Information: Bldg./Col.: C-331-T9 DMSA: 331-09 Origin: UA	Historical Documentation: _____ Process Knowledge: _____ Visual Inspections Completed: ____ External Surfaces Inspection ____ Internal Surfaces Inspection Date:	Sample A: ____ % ^{235}U ____ 1 sigma (% ^{235}U) ____ 2 sigma (% ^{235}U) ____ Total ^{235}U + 2 sigma) Sample B: ____ 1 sigma (% ^{235}U) ____ 2 sigma (% ^{235}U) ____ Total 2 sigma)	Sample A: ____ g ^{235}U Sample B:	____ Moderated Limits ____ Dry Limits	Sample A: Date & Time Performed: ___/___/___ ____ am/pm Date & Time Results Rec'd: ___/___/___ ____ am/pm Assumed Assay: ____ % ^{235}U Mass: ____ g ^{235}U Submitted By: ____ Date: Sample B: Date & Time Performed: ___/___/___ ____ am/pm Date & Time Results Rec'd: ___/___/___ ____ am/pm Assumed Assay: ____ % ^{235}U Mass: ____ g ^{235}U Submitted By: ____ Date:	Initial: Reclassification: ____ NCS-Exempt ____ __✓__ Spacing-Controlled ____ ____ Singularly-Contingent ____ DMSA/DRA Inspector: [illegible] Date: 8/07/01 NCS Engineer: (if Spacing-Controlled or Singularly-Contingent item is Date: ____ NDA Expert: ____ (if NDA is performed/solved) Date: ____ Independent Verifications: (BEFORE movement) Person #1 ____ Date: ____ Person #2 ____ Date: ____ Independent Verifications: (AFTER movement) Person #1: ____ Date: ____ Person #2: ____ Date: ____

Comments: SPACING CONTROL BY PREVIOUS CHARACTERIZATION (DMSA# 331-09-010)
REFER TO ATTACHED SHEETS FOR DETAILED INFORMATION
ALSO REFER TO NCSC-RM-PGDP-0002 R.0 FOR ADDITIONAL INFORMATION

Approved to Relocate: To ____ Further NCS characterization is required. Item does not contain Singularly-Contingent mass NDA Expert #1: ____ Date: ____ NDA Expert #2: ____ Date: ____ DMSA/DRA Inspector: ____ Date: ____ NCS Engineer: ____ Date: ____	I have independently confirmed the **identification and description** for this NCS-Exempt or Spacing-Controlled Item against the written instructions and find this information to match. Independent Person #1: ____ Date: ____ Independent Person #2: ____ Date: ____	I have independently confirmed the **destination** for this NCS-Exempt or Spacing-Controlled Item against the written instructions and find this information to match. Independent Person #1: ____ Date: ____ Independent Person #2: ____ Date: ____

Request For Disposal

Document ID Nur
110459

Generation Process Information (Completed by Generator)

W1. Generator's Name (Print)	W2. Badge No.	W3. Generator's Phone No.	W3. Mail Stop	W5. Charge No.
Terri Ross	31871	5325	C743T	

W6. Generator's Company	W7. Corp Owner	W8. Origin Site	W9. Origin Facility	W10. Origin Area	W11. Rad Area?
WESKEM	DOE	PGDP	C-331	C-331-09	☒ Yes ☐

W12. Number of Items	W13. Process Category (GCC)	W14. Process Activity Code	W15. AWA Number	W16. Physical Fo
1	LEG	A93	N/A	Solid

W17. Material Type(s)	W18. Holding Site	W19. Holding Facility	W20. Holding Area	W21 RFD Attachi
MT007	PGDP	C-331	C-331-09	☒ A ☐ B[

Waste Subcategories (Check all that apply)

	Yes	No		Yes	No		Yes	No		Yes
W22. Biological		✓	W25. Const. Debris		✓	W28. Non-Friable Asbestos		✓	W31. DMSA	✓
W23. Accountable		✓	W26. Classified		✓	W29. TRU Waste		✓		
W24. Carcinogen		✓	W27. Friable Asbestos		✓	W30. CERCLA		✓		

Waste Description / Comments

W32. DMSA0110809
C-310 Converter C-47449 zone 1/2 EJT 8/29/01
old # DMSA 331-09-011

This is to certify that the above named material is properly described and in the stated container, which is in good condition, marl with the RFD number, content, appropriate generation-date, source location, and at the stated location.

W33. Generation Plan No.	W34. Generator's Signature	Date
	Terri Ross	8/8/01

Handling / Pickup Information (Completed by Waste Management)

P1. Pick-up Site	P2. Pick-up Facility	P3. Pick-up Room/Area

P4. PPE Requirements

P5. Container-Labeling Requirements

___ RCRA	___ PCB	___ DET PCB (<50ppm & *source* <50ppm)	___ RAD	___ DOE
___ FISSILE	___ *NCS* EXEMPT	___ RD CONFIDENTIAL	___ ACID	___ USEC
___ FLAMMABLE	___ COMBUSTIBLE	___ OXIDIZER	___ BASE	___ WESKE
___ ASBESTOS	___ REACTIVE	___ TRANSURANIC	___ NON-HAZ	

P6. Additional Handling Instructions
Verify labeling, barcode + verify zone

Reference FWR	
Origin Date	
PCB Start Date	
RCRA Start Date	

P7. Waste Coordinator (Issued By)	Badge	Date	P8. Disposal/Storage Completed By	Badge	Date
Terri Ross	31871	8/8/01	[illegible]	704287	8/9/01
9. Field Supervisor	**Badge**	**Date**	**P10. Date Processing Completed By**	**Badge**	**Date**
[illegible]	12656	9/4/01	[illegible]	705451	9-4-01

11. Waste Item Information

Waste Item No. 110459
Container No. (Barcode) DMSA0110809
Weight ~4570 lb.
Location and Grid C-331-09 ZONE 1/2 EJT 8/29/01
Container Size ~177 ft³

P12. Operator Comments

CF-515a (03/01)

LOW-LEVEL RADIOACTIVE WASTE

ATTACHMENT A

DOCUMENT ID NUMBER 110459

A1. PYROPHORIC MATERIALS -OTHER THAN RADIOACTIVE FORMS OF ISOTOPES ☐ YES ☑ NO	A2. ACTIVE CHELATING AGENTS ☐ YES ☑ NO	☐ YES ☑ NO	☐ YES ☑ NO
A5. ETILOGICAL AGENTS ☐ YES ☑ NO	A6. IGNITION SOURCES ☐ YES ☑ NO	A7. FREE LIQUIDS (Unless Wastewater) ☐ YES ☑ NO	A8. RCRA WASTE ☐ YES ☑ NO / A9. TSCA WASTE/ ☐ YES ☑ NO

A10. WASTE VARIANCE REQUEST NUMBER(S)

ADDITIONAL WASTE CHARACTERISTICS

A11. CHELATING AGENTS ☐ YES ☑ NO	A12. ION EXCHANGE RESINS ☐ YES ☑ NO	A13. DETECTABLE PCB (Concen. And Source <50 ppm) ☐ YES ☑ NO CONC. ppm	A14. WASTEWATER ☐ YES ☑ NO

RADIOISOTOPE DETERMINATION METHOD

DOCUMENT TYPE	DOCUMENT NUMBER
R1. ANALYSIS SAMPLE ID NO.	
R2. PROCESS KNOWLEDGE FORM NO.	210

R3. FISSILE CONTENT (Wt% U-235)	R4. GRAMS U-235	R5. NCS EXEMPT ☐ YES ☑ NO	R5. CHEMICAL FORM

DOCUMENT TYPE	DOCUMENT NUMBER
01. ANALYSIS SAMPLE ID NO.	
02. PROCESS KNOWLEDGE FORM NO.	

RADIATION DATA FROM HEALTH PHYSICS SURVEY SURFACE CONTAMINATION (Data Supplied by HP)

R7. HP SURVEY REQUIRED ☐ YES ☐ NO

R8. TRANSFERABLE (Alpha) dpm/100cm2	R9. FIXED (Alpha) dpm/100cm2
R10. TRANSFERABLE (Beta/Gamma) dpm/100cm2	R11. FIXED (Beta/Gamma) dpm/100cm2
R12. EXTERNAL DOSU PACKAGE CONTACT MREM/HR	R13. DOSE RATE MREM/HR @ METERS (B/G)
R14. HP SIGNATURE	R15. SURVEY NUMBER

WASTE ITEM CONTAINER LOG

11 WASTE ITEM ID NO	12 ORIGIN DATE	13 RCRA ACCUMULATION START DATE	14 PCB DATE TO STORAGE
110459-01	8/8/01	N/A	N/A

15. WASTE MATERIAL PLACED IN (Or Removed From) CONTAINER	16. QUANTITY	17. DEPOSITOR INITIAL	17. DEPOSITOR DATE	18. COMMENTS (If Waste is removed from container, then final disposition must be noted.)
C-310 CONVERTER	1	JR	8/8/01	C-331-09-011 ZONE 2

19 CONTAINER ID NO (Barcode)	110 ABSORBENT MATERIALS? [ ] YES [✓] NO	QUANTITY	TYPE	111 NMC&A FORM	112 EST NET VOLUME	113 UNITS
MSA 0110809						

114 GROSS WEIGHT	115 UNITS	116 INNER CONTAINER TYPE	117 OUTER CONTAINER TYPE	118 TANK SEAL NUMBER

119 CONTAINER GENERATOR SIGNATURE [signature] DATE 8/8/01

UCN 20700 PAGE 2

DMSA/D&D NCS-Restricted Area Item - NCS Characterization Form

ANALYTICAL CHARACTERIZATION

ITEM	INITIAL CHARACTERIZATION	^{235}U Assay Analysis	^{235}U Mass Analysis	Subcritical Mass Limits	NDA Quantification Surveys	NCS CLASSIFICATION
Unique ID #: RFETS-ICAS9 Description: C-310 CONVERTER C-47449 Independent Confirmations: Individual #1: [illegible] Date: 8/2/01	Historical Documentation: _____ Process Knowledge: _____	Sample A: ____ % ^{235}U ____ 1 sigma (% ^{235}U) ____ 2 sigma (% ^{235}U) ____ Total (^{235}U + 2 sigma)	Sample A: ____ g ^{235}U Sample B: ____ g ^{235}U	____ Moderated Limits ____ Dry Limits	Sample A: Date & Time Performed: __/__/__ ____am/pm Date & Time Results Rec'd: __/__/__ ____am/pm Assumed Assay: ____ % ^{235}U Mass: ____ g ^{235}U Submitted By: _____ Date:	Initial: Reclassification: ____ NCS-Exempt ____ ____ Spacing-Controlled ____ ____ Singularly-Contingent ____ DMSA/DRA Inspector: [illegible] Date: 8/27/01 NCS Engineer: _____ (if Spacing-Controlled or Singularly-Contingent item is involved) Date: _____ NDA Expert: _____ (if NDA is performed) Date: _____
Other Information: Bldg./Col.: [illegible] Origin: NIT	____ External Surfaces Inspection Internal Surfaces Inspection Completed By: _____ Date: _____	Sample B: ____ 1 sigma (% ^{235}U) ____ 2 sigma (% ^{235}U) ____ Total (^{235}U + 2 sigma)			Sample B: Date & Time Performed: __/__/__ ____am/pm Date & Time Results Rec'd: __/__/__ ____am/pm Assumed Assay: ____ % ^{235}U Mass: ____ g ^{235}U Submitted By: _____ Date: _____	Independent Verifications: Person #1 _____ Date _____ Person #2 _____ Date: _____ Independent Verifications: (AFTER movement) Person #1: _____ Date _____ Person #2: _____ Date _____

Comments: SPACING CONTROL BY PREVIOUS CHARACTERIZATION (DMSA# 331-09-011)
REFER TO ATTACHED SHEETS FOR DETAILED INFORMATION
ALSO REFER TO NCS-RM-RFDP-CCC2RC FOR ADDITIONAL INFORMATION

Approved to Relocate: To _____
Further NCS characterization is required. Item does not contain Singularly-Contingent mass.
NDA Expert #1: _____ Date: _____
NDA Expert #2: _____ Date: _____
DMSA/DRA Inspector: _____ Date: _____

I have independently confirmed the **identification and description** for this NCS-Exempt or Spacing-Controlled Item against the written instructions and find this information to match.

Independent Person #1: _____
Date: _____

Independent Person #2: _____
Date: _____

I have independently confirmed the **destination** for this NCS-Exempt or Spacing-Controlled Item against the written instructions and find this information to match.

Independent Person #1: _____
Date: _____

Independent Person #2: _____
Date: _____

(PA-3003.4 - Rev 4 - 07 2001)

Request For Disposal

Document ID Numl
110460

Generation Process Information (Completed by Generator)

W1. Generator's Name (Print)	W2. Badge No.	W3. Generator's Phone No.	W3. Mail Stop	W5. Charge No.
Terri Ross	31871	5325	C7431	

W6. Generator's Company	W7. Corp Owner	W8. Origin Site	W9. Origin Facility	W10. Origin Area	W11. Rad Area?
WESKEM	DOE	PGDP	C-331	C-331-09	☒ Yes ☐

W12. Number of Items	W13. Process Category (GCC)	W14. Process Activity Code	W15. AWA Number	W16. Physical Fo
1	LEG	A93	N/A	Solid

W17. Material Type(s)	W18. Holding Site	W19. Holding Facility	W20. Holding Area	W21 RFD Attachr
MT007	PGDP	C-331	C-331-09	☒ A ☐ B[

Waste Subcategories (Check all that apply)

	Yes	No		Yes	No		Yes	No		Yes
W22. Biological		✓	W25. Const. Debris		✓	W28. Non-Friable Asbestos		✓	W31. DMSA	
W23. Accountable		✓	W26. Classified		✓	W29. TRU Waste		✓		
W24. Carcinogen		✓	W27. Friable Asbestos		✓	W30. CERCLA		✓		

Waste Description / Comments

W32. DMSA 0110810
C-310 Converter C-46440
old# 331-09-012

zone 1/2
EST
8/29/01

This is to certify that the above named material is properly described and in the stated container, which is in good condition, marl with the RFD number, content, appropriate generation date, source location, and at the stated location.

W33. Generation Plan No.	W34. Generator's Signature	Date
	Terri Ross	8/8/01

Handling / Pickup Information (Completed by Waste Management)

P1. Pick-up Site	P2. Pick-up Facility	P3. Pick-up Room/Area

P4. PPE Requirements

P5. Container-Labeling Requirements

___ RCRA	___ PCB	___ DET PCB (<50ppm & source <50ppm)		___ DOE
___ FISSILE	___ NCS EXEMPT	___ RD CONFIDENTIAL	___ ACID	___ USEC
___ FLAMMABLE	___ COMBUSTIBLE	___ OXIDIZER	___ BASE	___ WESKE!
___ ASBESTOS	___ REACTIVE	___ TRANSURANIC	___ NON-HAZ	

P6. Additional Handling Instructions

Verify labeling, barcode + verify zone

Reference FWR	
Origin Date	
PCB Start Date	
RCRA Start Date	

P7. Waste Coordinator (Issued By)	Badge	Date	P8. Disposal/Storage Completed By	Badge	Date
Terri Ross	31871	8/8/01	[illegible]	704287	8/9/01
P9. Field Supervisor	Badge	Date	P10. Data Processing Completed By	Badge	Date
[illegible]	[illegible]	9/4/01	[illegible]	705451	9-4-01

P11. Waste Item Information

Waste Item No. 110460
Container No. (Barcode) DMSA 0110810
Weight ~ 4520 LB
Location and Grid C-331-09 ZONE 1/2 EST 8/29/01
Container Size ~ 177 FT³

P12. Operator Comments

LOW-LEVEL RADIOACTIVE WASTE

ATTACHMENT A

DOCUMENT ID NUMBER: 110460

A1 PYROPHORIC MATERIALS -OTHER THAN RADIOACTIVE FORMS OF ISOTOPES ☐ YES ☑ NO	A2. ACTIVE CHELATING AGENTS ☐ YES ☑ NO	A3 TRU RADIOISOTOPES >100 nCi/g ☐ YES ☑ NO	A4. EXPLOSIVE MATERIALS ☐ YES	
A5. ETILOGICAL AGENTS ☐ YES ☑ NO	A6. IGNITION SOURCES ☐ YES ☑ NO	A7. FREE LIQUIDS (Unless Wastewa r) D Y E S	A8. RCRA WASTE ☐ YES ☑ NO	A9. TSCA WASTE ☐ YES ☑ NO

A11. CHELATING AGENTS ☐ YES ☑ NO	A12. ION EXCHANGE RESINS ☐ YES ☑ NO	A13. DETECTABLE PCB (Concen. And Source <50 ppm) CONC. ☐ YES ☑ NO ppm	A14. WASTEWATER ☐ YES ☑ NO

DOCUMENT TYPE	DOCUMENT NUMBER		
R1. ANALYSIS SAMPLE ID NO.			
R2. PROCESS KNOWLEDGE FORM NO.	210		
R3. FISSILE CONTENT (Wt% U-235)	R4. GRAMS U-235	R5. NCS EXEMPT ☐ YES ☑ NO	R5. CHEMICAL FORM

DOCUMENT TYPE	DOCUMENT NUMBER
O1. ANALYSIS SAMPLE ID NO.	
02. PROCESS KNOWLEDGE FORM NO.	

RADIATION DATA FROM HEALTH PHYSICS SURVEY
SURFACE CONTAMINATION (Data Supplied by HP)

R7. HP SURVEY REQUIRED ☐ YES ☐ NO

R8. TRANSFERABLE (Alpha) dpm/100cm2	R9. FIXED (Alpha) dpm/100cm2
R10. TRANSFERABLE (Beta/Gamma) dpm/100cm2	R11. FIXED (Beta/Gamma) dpm/100cm2
R12. EXTERNAL DOSUPACKAGE CONTACT MREM/HR	R13. DOSE RATE MREM/HR @ METERS (B/G)
R14. HP SIGNATURE	R15. SURVEY NUMBER

WASTE ITEM CONTAINER LOG

10. ITEM/CONTAINER		OF		DOCUMENT ID NUMBER
1		1		110460

11 WASTE ITEM ID NO	12 ORIGIN DATE	13 RCRA ACCUMULATION START DATE	14 PCB DATE TO STORAGE
110460-01	8/8/01	N/A	N/A

15. WASTE MATERIAL PLACED IN (Or Removed From) CONTAINER	16. QUANTITY	17. DEPOSITOR INITIAL	17. DEPOSITOR DATE	18. COMMENTS (If Waste is removed from container, then final disposition must be noted.)
C-310 Converter	1	JR	8/8/01	C-331-09-012 ZONE 2

19 CONTAINER ID NO (Barcode)	110 ABSORBENT MATERIALS?	QUANTITY	TYPE	111 NMC&A FORM	112 EST NET VOLUME	113 UNITS
DMSA 0110810	| | YES | ✓ | NO					

114 GROSS WEIGHT	115 UNITS	116 INNER CONTAINER TYPE	117 OUTER CONTAINER TYPE	118 TANK SEAL NUMBER

119 CONTAINER GENERATOR SIGNATURE: Denis Ramos

DATE 8/8/01

UCN-20700 PAGE 2

DMSA/D&D NCS-Restricted Area Item - NCS Characterization Form

Restricted Area Item - NCS Characterization Form

Unique ID #: KFD 1C4CC

C-46440

Independent Confirmations:
Individual #1: [illegible]
Date: 8/7/01
Individual #2: [illegible]
Date: 8/10/01

Other Information:
Bldg./Col. C-331-09
DMSA #: 331-09
Origin: N/A

Historical Documentation:

Process Knowledge:

Visual Inspections Completed:
____ External Surfaces Inspection
____ Internal Surfaces Inspection

Completed By:

Date:

ANALYTICAL CHARACTERIZATION

^{235}U Assay	^{235}U Mass	Subcritical Mass Limits	NDA Quantification Surveys	NCS CLASSIFICATION
Sample A:	Sample A:	____kg ^{235}U	Sample A: Date & Time Performed: __/__/__ ____am/pm	Initial: Reclassification:
____ % ^{235}U	____ g ^{235}U	____Moderated Limits	Date & Time Results Rec'd: __/__/__ ____am/pm	____ NCS-Exempt ____
____ 1 sigma (% ^{235}U)		____Dry Limits	Assumed Assay: ____ % ^{235}U	✓ Spacing-Controlled ____
____ 2 sigma (% ^{235}U)			Mass: ____ g ^{235}U	____ Singularly-Contingent ____
____ Total (^{235}U + 2 sigma)	Sample B:		Submitted By:	DMSA/DRA Inspector: [illegible]
Sample B:	____ g ^{235}U		Date:	Date: 8/07/01
____ % ^{235}U			Sample B: Date & Time Performed: __/__/__ ____am/pm	NCS Engineer:
____ 1 sigma (% ^{235}U)			Date & Time Results Rec'd: __/__/__ ____am/pm	(if Spacing-Controlled or Singularly-Contingent item is involved)
____ 2 sigma (% ^{235}U)			Assumed Assay: ____ % ^{235}U	Date:
____ Total (^{235}U + 2 sigma)			Mass: ____ g ^{235}U	NDA Expert:
			Submitted By:	(if NDA is performed)
			Date:	Date:
				Independent Verifications: (BEFORE movement)
				Person #1:
				Date:
				Person #2:
				Date:
				Independent Verifications: (AFTER movement)
				Person #1:
				Date:
				Person #2:
				Date:

Comments: SPACING CONTROL BY PREVIOUS CHARACTERIZATION (DMSA# 331-09-012) REFER TO ATTACHED SHEETS FOR DETAILED INFORMATION AND REFER TO NCSE-RM-RGDP-0002 RC FOR ADDITIONAL INFORMATION.

Approved to Relocate: To ____
Further NCS characterization is required. Item does not contain Singularly-Contingent mass.
NDA Expert #1: ____ Date: ____
NDA Expert #2: ____ Date: ____
DMSA/DRA Inspector: ____ Date: ____
NCS Engineer: ____ Date: ____

I have independently confirmed the **identification and description** for this NCS-Exempt or Spacing-Controlled Item against the written instructions and find this information to match.
Independent Person #1: ____
Date: ____
Independent Person #2: ____
Date: ____

I have independently confirmed the **destination** for this NCS-Exempt or Spacing-Controlled Item against the written instructions and find this information to match.
Independent Person #1: ____
Date: ____
Independent Person ____
Date: ____

(PA-3003A - Rev. 4 - 07/2001)

W1 Generator's Name (Print)	W2. Badge No.	W3. Generator's Phone No.	W3. Mail Stop	W5. Charge No
Terri Ross	31871	5325	C7431	

W6. Generator's Company	W7. Corp Owner	W8. Origin Site	W9. Origin Facility	W10. Origin Area	W11. Rad Area?
WESKEM	DOE	PGDP	C-331	C-331-09	☒ Yes ☐

W12. Number of Items	W13. Process Category (GCC)	W14. Process Activity Code	W15. AWA Number	W16. Physical F
1	LEG	A93	N/A	Solid

W17. Material Type(s)	W18. Holding Site	W19. Holding Facility	W20. Holding Area	W21 RFD Attach
MT007	PGDP	C-331	C-331-09	☒ A ☐ B

Waste Subcategories (Check all that apply)

	Yes	No		Yes	No		Yes	No		Yes
W22. Biological		✓	W25. Const. Debris		✓	W28. Non-Friable Asbestos		✓	W31. DMSA	✓
W23. Accountable		✓	W26. Classified		✓	W29. TRU Waste		✓		
W24. Carcinogen		✓	W27. Friable Asbestos		✓	W30. CERCLA		✓		

Waste Description / Comments

W32. DMSA 0110811 Zone 1/2 EST 8/29/01
C-310 converter internal cone plate
old# 331-09-013

This is to certify that the above named material is properly described and in the stated container, which is in good condition, mark with the RFD number, content, appropriate generation date, source location, and at the stated location.

W33. Generation Plan No.	W34. Generator's Signature	Date
	Terri Ross	8/7/01

Handling / Pickup Information (Completed by Waste Management)

P1. Pick-up Site	P2. Pick-up Facility	P3. Pick-up Room/Area

P4. PPE Requirements

P5. Container-Labeling Requirements

___ ASBESTOS ___ REACTIVE

P6. Additional Handling Instructions
Verify labeling, barcod &

Reference FWR
Origin Date
PCB Start Date
RCRA Start Date

P7. Waste Coordinator (Issued By)	Badge	Date	P8. Disposal/Storage Completed By	Badge	Date
Terri Ross	31871	8/8/01	[illegible]	704287	8/9/01
Field Supervisor [illegible]	13556	9/4/01	P10. Data Processing Completed By [illegible]	205451	9-4-01

P12. Operator Comments

11. waste item Information

Waste Item No. 110461
Container No. (Barcode) DMSA 0110811
Weight ~1500 lb.
Location and Grid C-331-09 Zone 1/2 EST 8/29/01
Container Size ~1.0 ft³

LOW-LEVEL RADIOACTIVE WASTE

ATTACHMENT A

DOCUMENT ID NUMBER: 110461

PROHIBITED ITEMS

A1. PYROPHORIC MATERIALS -OTHER THAN RADIOACTIVE FORMS OF ISOTOPES ☐ YES ☑ NO	A2. ACTIVE CHELATING AGENTS ☐ YES ☑ NO	A3. TRU RADIOISOTOPES>100 nCi/g ☐ YES ☑ NO	A4. EXPLOSIVE MATERIALS ☐ YES ☑ NO	
A5. ETILOGICAL AGENTS ☐ YES ☑ NO	A6. IGNITION SOURCES ☐ YES ☑ NO	A7. FREE LIQUIDS (Unless Wastewater) ☐ YES ☑ NO	A8. RCRA WASTE ☐ YES ☑ NO	A9. TSCA WASTE ☐ YES ☑ NO

ADDITIONAL WASTE CHARACTERISTICS

A11. CHELATING AGENTS ☐ YES ☑ NO	A12. ION EXCHANGE RESINS ☐ YES ☑ NO	A13. DETECTABLE PCB (Concen. And Source <50 ppm) ☐ YES ☑ NO CONC. ppm	A14. WASTEWATER ☐ YES ☑ NO

DOCUMENT TYPE	DOCUMENT NUMBER		
R1. ANALYSIS SAMPLE ID NO.			
R2. PROCESS KNOWLEDGE FORM NO.	210		
R3. FISSILE CONTENT (Wt% U-235)	R4. GRAMS U-28	R5. NCS EXEMPT ☑ YES ☐ NO	R5. CHEMICAL FORM

DOCUMENT N P E	DOCUMENT NUMBER
O1. ANALYSIS SAMPLE ID NO.	
02. PROCESS KNOWLEDGE FORM NO.	

RADIATION DATA FROM HEALTH PHYSICS SURVEY SURFACE CONTAMINATION (Data Supplied by HP)

R7. HP SURVEY REQUIRED ☐ YES ☐ NO

R8. TRANSFERABLE (Alpha) dpm/100cm2	R9. FIXED (Alpha) dpm/100cm2
R10. TRANSFERABLE (Beta/Gamma) dpm/100cm2	R11. FIXED (Beta/Gamma) dpm/100cm2
R12. EXTERNAL DOSEPACKAGE CONTACT MREM/HR	R13. DOSE RATE MREM/HR @ METERS (B/G)
R14. HP SIGNATURE	R15. SURVEY NUMBER

WASTE ITEM CONTAINER LOG

10. ITEM/CONTAINER				DOCUMENT ID NUMBER
1 OF 1				110461
11 WASTE ITEM ID NO	12 ORIGIN DATE	13 RCRA ACCUMULATION START DATE		14 PCB DATE TO STORAGE
110461-01	8/7/01	N/A		N/A

15. WASTE MATERIAL PLACED IN (Or Removed From) CONTAINER	16. QUANTITY	17. DEPOSITOR INITIAL	17. DEPOSITOR DATE	18. COMMENTS (If Waste is removed from container, then final disposition must be noted.)
C-310 Converter Internal Cone Plate	1	JR	8/7/01	EST 8/31/01 ~~EST~~ ~~C-E-331~~ C-331-09-013 Zone 2

19 CONTAINER ID NO (Barcode)	110 ABSORBENT MATERIALS? ☐ YES ☑ NO	QUANTITY	TYPE	111 NMC&A FORM	112 EST NET VOLUME	113 UNITS
DMSA 0110811						

114 GROSS WEIGHT	115 UNITS	116 INNER CONTAINER TYPE	117 OUTER CONTAINER TYPE	118 TANK SEAL NUMBER

119 CONTAINER GENERATOR SIGNATURE: [signature]

DATE: 8/7/01

UCN 20700 PAGE 2

DMSA/D&D NCS-Restricted Area Item - NCS Characterization Form

ITEM	INITIAL CHARACTERIZATION	ANALYTICAL CHARACTERIZATION: ^{235}U Assay Analysis	ANALYTICAL CHARACTERIZATION: ^{235}U Mass Analysis	ANALYTICAL CHARACTERIZATION: Subcritical Mass Limits	ANALYTICAL CHARACTERIZATION: NDA Quantification Surveys	NCS CLASSIFICATION
Unique ID #: RFD1KA41 DUBBLE COKE PLATE Independent Confirmations: Individual #1: S.W. Frank 1/7/01 Individual #2: Joe King Date: 1/10/01 Other Information: Bldg./Col.: C-331-STC DMSA #: 331-09 Origin: NA	Historical Documentation: Process Knowledge: Visual Inspections Completed: ____ External Surfaces Inspection ____ Internal Surfaces Inspection Completed By: Date:	____ % ^{235}U ____ 1 sigma (% ^{235}U) ____ 2 sigma (% ^{235}U) ____ Total (^{235}U + 2 sigma) Sample B: ____ % ^{235}U ____ 1 sigma (% ^{235}U) ____ 2 sigma (% ^{235}U) ____ Total (^{235}U + 2 sigma)	Sample A: ____ g ^{235}U Sample B: ____ g ^{235}U	____ kg ^{235}U ____ Moderated Limits ____ Dry Limits	Sample A: Date & Time Performed: __/__/__ ____ am/pm Date & Time Results Rec'd: __/__/__ ____ am/pm Assumed Assay: ____ % ^{235}U Mass: ____ g ^{235}U Submitted By: Date: Sample B: Date & Time Performed: __/__/__ ____ am/pm Date & Time Results Rec'd: __/__/__ ____ am/pm Assumed Assay: ____ % ^{235}U Mass: ____ g ^{235}U Submitted By: Date:	Initial: Reclassification: ✓ NCS-Exempt ____ Spacing-Controlled ____ Singularly-Contingent DMSA/DRA Inspector: S.W. Frank Date: 1/10/01 NCS Engineer: (If Spacing-Controlled or Singularly-Contingent item is involved) Date: NDA Expert: (if NDA is performed) Date: Independent Verifications: (BEFORE movement) Person #1: Date: Person #2: Date: Independent Verifications: (AFTER movement) Person #1: Date: Person #2: Date:

Comments: NCS EXEMPT BY PREVIOUS CHARACTERIZATION (DMSA# 331-09-013)
REFER TO ATTACHED SHEETS FOR DETAILED INFORMATION

Approved to Relocate: To _____
Further NCS characterization is required. Item does not contain Singularly-Contingent mass
NDA Expert #1: _____ Date: _____
NDA Expert #2: _____ Date: _____
DMSA/DRA Inspector: _____ Date: _____
NCS Engineer: _____ Date: _____

I have independently confirmed the **identification and description** for this NCS-Exempt or Spacing-Controlled Item against the written instructions and find this information to match.

Independent Person #1: _____
Date: _____

Independent Person #2: _____
Date: _____

I have independently confirmed the **destination** for this NCS-Exempt or Spacing-Controlled Item against the written instructions and find this

Independent Person #1: _____
Date: _____

Independent Person #2: _____
Date: _____

Request For Disposal

110462

W1 Generator's Name (Print)	W2 Badge No	W3 Generator's Phone No	W3 Mail Stop	W5 Charge No /
Terri Ross	31871	5325	C7431	

W6. Generator's Company	W7. Corp Owner	W8. Origin Site	W9. Origin Facility	W10 Origin Area	W11. Rad Area?
WESKEM	DOE	PGDP	C-331	C-331-09	☒ Yes ☐

W12. Number of Items	W13. Process Category (GCC)	W14. Process Activity Code	W15. AWA Number	W16. Physical Fo
1	LEG	A93	N/A	Solid

W17. Material Type(s)	W18. Holding Site	W19. Holding Facility	W20. Holding Area	W21 RFD Attachm
MT007	PGDP	C-33	C-331-09	☒ A ☐ B ☐

W24. Carcinogen			W27. Friable Asbestos			W30. CERCLA			

Waste Description / Comments

W32.

Zone 12 ESI 8/29/01

old # C-331-09-014

This is to certify that the above named material is properly described and in the stated container, which is in good condition, marke with the RFD number, content, appropriate generation date, source location, and at the stated location.

W33. Generation Plan No.	W34. Generator's Signature	Date
	Terri Ross	8/7/01

Handling / Pickup Information (Completed by Waste Management)

P1. Pick-up Site	P2. Pick-up Facility	P3. Pick-up Room/Area

P4. PPE Requirements

P5. Container-Labeling Requirements

___ RCRA	___ PCB	___ DET PCB (<50ppm & source <50ppm)	___ RAD	___ DOE
___ FISSILE	___ NCS EXEMPT	___ RD CONFIDENTIAL	___ ACID	___ USEC
___ FLAMMABLE	___ COMBUSTIBLE	___ OXIDIZER	___ BASE	___ WESKEM
___ ASBESTOS	___ REACTIVE	___ TRANSURANIC	___ NON-HAZ	

P6. Additional Handling Instructions

Verify labeling, barcode & verify zone

Reference FWR	
Origin Date	
PC6 Start Date	
RCRA Start Date	

P7. Waste Coordinator (Issued By)	Badge	Date	P8. Disposal/Storage Completed By	Badge	Date
Terri Ross	31871	8/8/01	[illegible]	704287	8/9/01
Field Supervisor	**Badge**	**Date**	**P10. Data Processing Completed By**	**Badge**	**Date**
[illegible]	136SC	9/4/01	[illegible]	705451	9-4-01

P11. Waste Item Information

Waste Item No. 110462

Container No. (Barcode) DMSA 011081Z

Weight ~ 300 LB

Area and Grid C-331-09 Zone 12 ESI 8/29/01

Container Size ~ 7.5 FT³

P12. Operator Comments

ICS-515a (03/01)

LOW-LEVEL RADIOACTIVE WASTE

DOCUMENT ID NUMBER
110462

A1. PYROPHORIC MATERIALS -OTHER THAN RADIOACTIVE FORMS OF ISOTOPES ☐ YES ☑ NO	A2. ACTIVE CHELATING AGENTS ☐ YES ☑ NO	A3. TRU RADIOISOTOPES >100 nCi/g ☐ YES ☑ NO	A4. EXPLOSIVE MATERIALS ☐ YES ☑ NO
A5. ETILOGICAL AGENTS ☐ YES ☑ NO	A6. IGNITION SOURCES ☐ YES ☑ NO	A7. FREE LIQUIDS (Unless Wastewater) ☐ YES ☑ NO	A8. RCRA WASTE ☐ YES ☑ NO / A9. TSCA WASTE ☐ YES ☑ NO

A10. WASTE VARIANCE REQUEST NUMBER(S)

A11. CHELATING AGENTS ☐ YES ☑ NO	A12. ION EXCHANGE RESINS ☐ YES ☑ NO	A13. DETECTABLE PCB (Concen. And Source <50 ppm) CONC. ☐ YES ☑ NO ppm	A14. WASTEWATER ☐ YES ☑ NO

DOCUMENT TYPE	DOCUMENT NUMBER
R1. ANALYSIS SAMPLE ID NO.	
R2. PROCESS KNOWLEDGE FORM No.	210

R3. FISSILE CONTENT (Wt% U-235)	R4. GRAMS U-235	R5. NCS EXEMPT ☑ YES ☐ NO	R5. CHEMICAL FORM

DOCUMENT TYPE	DOCUMENT NUMBER
O1. ANALYSIS SAMPLE ID NO.	
02. PROCESS KNOWLEDGE FORM NO.	

RADIATION DATA FROM HEALTH PHYSICS SURVEY
SURFACE CONTAMINATION (Data Supplied by HP)

R7. HP SURVEY REQUIRED ☐ YES ☐ NO

R8. TRANSFERABLE (Alpha) dpm/100cm2	R9. FIXED (Alpha) dpm/100cm2
R10. TRANSFERABLE (Beta/Gamma) dpm/100cm2	R11. FIXED (Beta/Gamma) dpm/100cm2
R12. EXTERNAL DOSE/PACKAGE CONTACT MREM/HR	R13. DOSE RATE MREM/HR @ METERS (B/G)
R14. HP SIGNATURE	R15. SURVEY NUMBER

WASTE ITEM CONTAINER LOG

110462

11. WASTE ITEM ID NO	12. ORIGIN DATE	13. RCRA ACCUMULA	14. PCB DATE TO STORAGE
110462-01	8/7/01	N/A	N/A

15. WASTE MATERIAL PLACED IN (Or Removed From) CONTAINER	16. QUANTITY	17. DEPOSITOR INITIAL	17. DEPOSITOR DATE	18. COMMENTS (If Waste is removed from container, then final disposition must be noted.)
CONVERTER SADDLES	1	JR	8/7/01	C-331-09-014
				ZONE 2

19. CONTAINER ID NO (Barcode)	110. ABSORBENT MATERIALS? ☐ YES ☑ NO	QUANTITY	TYPE	111. NMC&A FORM	112. EST. NET VOLUME	113. UNITS
MSA0110812						

114. GROSS WEIGHT	115. UNITS	116. INNER CONTAINER TYPE	117. OUTER CONTAINER TYPE	118. TANK SEAL NUMBER

119. CONTAINER GENERATOR SIGNATURE: [signature] DATE: 8/7/01

UCN-20700 PAGE 2

DMSA/D&D NCS-Restricted Area Item - NCS Characterization Form

ITEM	INITIAL CHARACTERIZATION	ANALYTICAL CHARACTERIZATION: ^{235}U Assay Analysis	ANALYTICAL CHARACTERIZATION: ^{235}U Mass Analysis	ANALYTICAL CHARACTERIZATION: Subcritical Mass Limits	ANALYTICAL CHARACTERIZATION: NDA Quantification Surveys	NCS CLASSIFICATION
Unique ID #: RED HEAD Description: CONTAINER SADDLE Independent Confirmations: Individual #1: [illegible] Date: 5/7/01 Individual #2: [illegible] Date: 8/10-01 . . . . . . Other Information: Bldg./Col.: C-331-540 DMSA #: 331-09 Origin	Historical Documentation: ____ Process Knowledge: ____ Visual Inspections Completed: ____ External Surfaces Inspection ____ Internal Surfaces Inspection Completed By: ____ Date: ____	Sample A: ____ % ^{235}U ____ 1 sigma (% ^{235}U) ____ 2 sigma (% ^{235}U) ____ Total (^{235}U + 2 sigma) Sample B: ____ % ^{235}U ____ 1 sigma (% ^{235}U) ____ 2 sigma (% ^{235}U) ____ Total (^{235}U + 2 sigma)	Sample A: ____ g ^{235}U Sample B: ____ g ^{235}U	____ kg ^{235}U ____ Moderated Limits ____ Dry Limits	Sample A: Date & Time Performed: __/__/__ ____ am/pm Date & Time Results Rec'd: __/__/__ ____ am/pm Assumed Assay: ____ % ^{235}U Mass: ____ g ^{235}U Submitted By: ____ Date: ____ Sample B: Date & Time Performed: __/__/__ ____ am/pm Date & Time Results Rec'd: __/__/__ ____ am/pm Assumed Assay: ____ % ^{235}U Mass: ____ g ^{235}U Submitted By: ____ Date: ____	Initial: Reclassification: ✓ NCS-Exempt ____ ____ Spacing-Controlled ____ ____ Singularly-Contingent ____ DMSA/DRA Inspector: [illegible] Date: ____ NCS Engineer: ____ (If Spacing-Controlled or Singularly-Contingent item is involved) Date: ____ NDA Expert: ____ (if NDA's performed) Date: ____ Independent Verifications: (BEFORE movement) Person #1: ____ Date: ____ Person #2: ____ Date: ____ Independent Verifications: (AFTER movement) Person #1: ____ Date: ____ Person #2: ____ Date: ____

Comments: NCS EXEMPT BY PREVIOUS CHARACTERIZATION (DMSA# 331-09-014)
REFER TO ATTACHED SHEETS FOR DETAILED INFORMATION.

Approved to Relocate: To ____ Further NCS characterization is required. Item does not contain Singularly-Contingent mass. NDA Expert #1: ____ Date: ____ NDA Expert #2: ____ Date: ____ DMSA/DRA Inspector ____ Date: ____ NCS Engineer: ____ Date: ____	I have independently confirmed the identification and description for this NCS-Exempt or Spacing-Controlled Item against the written instructions and find this information to match. Independent Person #1. ____ Date: ____ Independent Person #2: ____ Date: ____	I have independently confirmed the destination for this NCS-Exempt or Spacing-Controlled Item against the written instructions and find this information to match. Independent Person #1 : ____ Date: ____ Independent Person #2: ____ Date: ____

(PA-3003A - Rev 4 - 07 2001)

Request For Disposal

Document ID Nun
110463

Generation Process Information (Completed by Generator)

W1 Generator's Name (Print)	W2. Badge No.	W3. Generator's Phone No.	W3. Mail Stop	W5. Charge No.
Terri Ross	31871	5325	C7431	

W6. Generator's Company	W7. Corp Owner	W8. Origin Site	W9. Origin Facility	W10. Origin Area	W11. Rad Area?
WESKEM	DOE	PGDP	C-331	C-331-09	☒ Yes ☐

W12. Number of Items	W13. Process Category (GCC)	W14. Process Activity Code	W15. AWA Number	W16. Physical Fo
1	LEG	A93	N/A	Solid

W17. Material Type(s)	W18. Holding Site	W19. Holding Facility	W20. Holding Area	W21 RFD Attachi
MT007	PGDP	C-331	C-331-09	☒ A ☐ B[

Waste Subcategories (Check all that apply)

	Yes	No		Yes	No		Yes	No		Yes
W22. Biological		✓	W25. Const. Debris		✓	W28. Non-Friable Asbestos		✓	W31. DMSA	✓
W23. Accountable		✓	W26. Classified		✓	W29. TRU Waste		✓		
W24. Carcinogen		✓	W27. Friable Asbestos		✓	W30. CERCLA		✓		

Waste Description / Comments

W32. DMSA 0110813 Zone 12 EST 8/29/01
Converter saddles
Old# 331-09 [illegible]

This is to certify that the above named material is properly described and in the stated container, which in the stated contain in good condition, marke with the RFD number, content, appropriate generation date, source location, and at the stated location.

W33. Generation Plan No.	W34. Generator's Signature	Date
	Terri Ross	8/8/01

Handling / Pickup Information (Completed by Waste Management)

P1. Pick-up Site	P2. Pick-up Facility	P3. Pick-up Room/Area

P4. PPE Requirements

P5. Container-Labeling Requirements

P6. Additional Handling Instructions
Additional Labeling Instructions

FLAMMABLE — COMBUSTIBLE — ASBESTOS — REACTIVE — NCS EXEMPT — DET PCB (<50ppm & source <50ppm) — RD CONFIDENTIAL — OXIDIZER — TRANSURANIC — RAD — ACID — NON-HAZ — BASE — NON-HAZ — DOEC — WESKEM

Reference PWR

Origin Date
PCB Start Date
RCRA Start Date

P7. Waste Coordinator (Issued By)	Badge	Date	P8. Disposal/Storage Completed By	Badge	Date
Terri Ross	31871	8/8/01	[illegible]	704287	8/9/0
Field Supervisor	Badge	Date	P10. Data Processing Completed By	Badge	Date
[illegible]	13656	9/4/01	[illegible]	705451	9-4-0

P11. Waste Item Information

Waste Item No. 110463
Container No. (Barcode) DMSA 0110813
Weight ~300 lb
Location Grid C-331-09 Zone 12 EST 8/29/01
Container Size ~7.5 ft³

P12. Operator Comments

LOW-LEVEL RADIOACTIVE WASTE

ATTACHMENT A

DOCUMENT ID NUMBER 110463

PROHIBITED ITEMS

A1. PYROPHORIC MATERIALS -OTHER THAN RADIOACTIVE FORMS OF ISOTOPES	A2. ACTIVE CHELATING AGENTS	A3. TRU RADIOISOTOPES <100 nCi/g	A4. EXPLOSIVE MATERIALS
☐ YES ☑ NO	☐ YES	☐ YES ☑ NO	☐ YES ☑ NO

A5. ETILOGICAL AGENTS	A6. IGNITION SOURCES	A7. FREE LIQUIDS (Unless Wastewater)	A8. RCRA WASTE	A9. TSCA WASTE
☐ YES ☑ NO	☐ YES ☑ NO	☐ YES ☑ NO	☐ YES ☑ NO	☐ YES ☑ NO

A10. WASTE VARIANCE REQUEST NUMBER(S)

A11. CHELATING AGENTS	A12. ION EXCHANGE RESINS	A13. DETECTABLE PCB (Concen. And Source <50 ppm) CONC.	A14. WASTEWATER
☐ YES ☑ NO	☐ YES ☑ NO	☐ YES ☑ NO ppm	☐ YES ☑ NO

DOCUMENT TYPE	DOCUMENT NUMBER
R1. ANALYSIS SAMPLE ID NO.	
R2. PROCESS KNOWLEDGE FORM NO.	210

R3. FISSILE CONTENT (Wt% U-235)	R4. GRAMS U-235	R5. NCS EXEMPT	R5. CHEMICAL FORM
		☑ YES ☐ NO	

DOCUMENT TYPE	DOCUMENT NUMBER
01. ANALYSIS SAMPLE ID NO.	
02. PROCESS KNOWLEDGE FORM NO.	

RADIATION DATA FROM HEALTH PHYSICS SURVEY SURFACE CONTAMINATION (Data Supplied by HP)

R7. HP SURVEY REQUIRED

☐ YES ☐ NO

R8. TRANSFERABLE (Alpha) dpm/100cm2	R9. FIXED (Alpha) dpm/100cm2
R10. TRANSFERABLE (Beta/Gamma) dpm/100cm2	R11. FIXED (Beta/Gamma) dpm/100cm2
R12. EXTERNAL DOSUPACKAGE CONTACT MREM/HR	R13. DOSE RATE MREM/HR @ METERS (B/G)
R14. HP SIGNATURE	R15. SURVEY NUMBER

WASTE ITEM CONTAINER LOG

10. ITEM/CONTAINER			DOCUMENT ID NUMBER
1	OF	1	110463

11 WASTE ITEM ID NO	12 ORIGIN DATE	13 RCRA ACCUMULATION START DATE	14 PCB DATE TO STORAGE
110463-01	8/8/01	N/A	N/A

15. WASTE MATERIAL PLACED IN (Or Removed From) CONTAINER	16. QUANTITY	17. DEPOSITOR INITIAL	17. DEPOSITOR DATE	18. COMMENTS (If Waste is removed from container, then final disposition must be noted.)
Converter Saddles	1	JR	8/8/01	C-333-09-015 Zone 2

19 CONTAINER ID NO (Barcode)	110 ABSORBENT MATERIALS? ☐ YES ☑ NO	QUANTITY	TYPE	111 NMC&A FORM	112 EST NET VOLUME	113 UNITS
MSA 0110813						

114 GROSS WEIGHT	115 UNITS	116 INNER CONTAINER TYPE	117 OUTER CONTAINER TYPE	118 TANK SEAL NUMBER

119 CONTAINER GENERATOR SIGNATURE: Geri Ross

DATE 8/8/01

UCN-20700 PAGE 2

DMSA/D&D NCS-Restricted Area Item - NCS Characterization Form

ITEM	INITIAL CHARACTERIZATION	ANALYTICAL CHARACTERIZATION: ^{235}U Assay Analysis	^{235}U Mass Analysis	Subcritical Mass Limits	NDA Quantification, Surveys	NCS CLASSIFICATION
Unique ID = REF: 1CAC3 Description: CONVERTER SADDLE Independent Confirmations: Individual #1: [illegible] Date: [illegible] Individual #2: [illegible] Date: Other Information: Bldg/Col: C-331 DMSA#: 331-09 Origin: N/A	Historical Documentation: Process Knowledge: Visual Inspections Completed: ____ External Surfaces Inspection ____ Internal Surfaces Inspection Completed By: Date:	Sample A: ____ % ^{235}U ____ 1 sigma (% ^{235}U) ____ 2 sigma (% ^{235}U) ____ Total (^{235}U + 2 sigma) Sample B: ____ % ^{235}U ____ 1 sigma (% ^{235}U) ____ 2 sigma (% ^{235}U) ____ Total (^{235}U + 2 sigma)	Sample A: ____ g ^{235}U Sample B: ____ g ^{235}U	____ ^{235}U ____ Moderated Limits ____ Dry Limits	Sample A: Date & Time Performed: __/__/__ ____ am/pm Date & Time Results Rec'd: __/__/__ ____ am/pm Assumed Assay: ____ % ^{235}U Mass: ____ g ^{235}U Submitted By: Date: Sample B: Date & Time Performed: __/__/__ ____ am/pm Date & Time Results Rec'd: __/__/__ ____ am/pm Assumed Assay: ____ % ^{235}U Mass: ____ g ^{235}U Submitted By: Date:	Initial: Reclassification: ✓ NCS-Exempt ____ Spacing-Controlled ____ Singularly-Contingent DMSA/DRA Inspector: [illegible] Date: [illegible] NCS Engineer: (If Spacing-Controlled or Singularly-Contingent item is involved) Date: NDA Expert: (if NDA is performed) Date: Independent Verifications: (BEFORE movement) Person #1: Date: Person #2: Date: Independent Verifications: (AFTER movement) Person #1: Date: Person #2: Date:

Comments: NCS EXEMPT BY PREVIOUS CHARACTERIZATION (DMSA# 331-09-015)
REFER TO ATTACHED SHEETS FOR DETAILED INFORMATION

Approved to Relocate: To _____
Further NCS characterization is required. Item does not contain Singularly-Contingent mass
NDA Expert #1: _____ Date: _____
NDA Expert #2: _____ Date: _____
DMSA/DRA Inspector: _____ Date: _____
NCS Engineer: _____ Date: _____

I have independently confirmed the **identification and description** for this NCS-Exempt or Spacing-Controlled Item against the written instructions and find this information to match.

Independent Person #1: _____
Date: _____

Independent Person #2: _____
Date: _____

I have independently confirmed the **destination** for this NCS-Exempt or Spacing-Controlled Item against the written instructions and find this information to match.

Independent Person #1: _____
Date: _____

Independent Person #2: _____
Date: _____

(PA-3003A - Rev. 4 - 07.2001)

Request For Disposal

Document ID Nun
110464

Generation Process Information (Completed by Generator)

W1. Generator's Name (Print)	W2. Badge No.	W3. Generator's Phone No.	W3. Mail Stop	W5. Charge No.
Terri Ross	31871	5325	C7431	

W6. Generator's Company	W7. Corp Owner	W8. Origin Site	W9. Origin Facility	W10. Origin Area	W11. Rad Area?
WESKEM	DOE	PGDP	C-331	C-331-09	☒ Yes ☐

W12. Number of Items	W13. Process Category (GCC)	W14. Process Activity Code	W15. AWA Number	W16. Physical Fo
1	LEG	A93	N/A	Solid

W17. Material Type(s)	W18. Holding Site	W19. Holding Facility	W20. Holding Area	W21 RFD Attachn
MT007	PGDP	C-331	C-331-09	☒ A ☐ B[

Waste Subcategories (Check all that apply)

	Yes	No		Yes	No		Yes	No		Yes	N
W22. Biological		✓	W25. Const. Debris		✓	W28. Non-Friable Asbestos		✓	W31. DMSA	✓	
W23. Accountable		✓	W26. Classified		✓	W29. TRU Waste		✓			
W24. Carcinogen		✓	W27. Friable Asbestos		✓	W30. CERCLA		✓			

Waste Description / Comments

W32. DMSA 0110814 Zone X2 EST 8/29/01
Converter caddie
old# C-331-09-016

This is to certify that the above named material is properly described and in the stated container, which is in good condition, mark with the RFD number, content, appropriate generation date, source location, and at the stated location.

W33. Generation Plan No.	W34. Generator's Signature	Date
	Terri Ross	8/8/01

Handling / Pickup Information (Completed by Waste Management)

P1. Pick-up Site	P2. Pick-up Facility	P3. Pick-up Room/Area

P4. PPE Requirements

P5. Container-Labeling Requirements

___ RCRA	___ PCB	___ DET PCB (<50ppm & source <50ppm)	___ RAD	___ DOE
___ FLAMMABLE	___ NCS EXEMPT	___ RD CONFIDENTIAL	___ ACID	___ USEC
	___ COMBUSTIBLE	___ OXIDIZER	___ BASE	___ WESKEM
___ ASBESTOS	___ REACTIVE	___ TRANSURANIC	___ NON HAZ	

P6. Additional Handling Instructions

Verify labeling, barcode & verify zone

Reference FWR	
Origin Date	
PCB Start Date	
RCRA Start Date	

Waste Coordinator (Issued By)	Badge	Date	P8. Disposal/Storage Completed By	Badge	Date
Terri Ross	31871	8/8/01	[illegible]	704290	8/9/01
Field Supervisor	**Badge**	**Date**	**P10. Data Processing Completed By**	**Badge**	**Date**
[illegible]	126SC	9/4/01	[illegible]	705451	9-4-01

11. Waste Item Information

te Item No. 110464-01
ainer No. (Barcode) 0110814
eight ~ 300 LB
atic d Grid C-331-09 Zone X2 EST 8/29/01
iner Size ~ 7.5 FT³

P12. Operator Comments

F-515a (03/01)

LOW-LEVEL RADIOACTIVE WASTE

ATTACHMENT A

DOCUMENT ID NUMBER 110464

A1. PYROPHORIC MATERIALS -OTHER THAN RADIOACTIVE FORMS OF ISOTOPES ☐ YES ☑ NO	A2. ACTIVE CHELATING AGENTS ☐ YES ☑ NO	A3. TRU RADIOISOTOPES>100 nCi/g ☐ YES ☑ NO	A4. EXPLOSIVE MATERIALS ☐ YES ☑ NO	
A5. ETILOGICAL AGENTS ☐ YES ☑ NO	A6. IGNITION SOURCES ☐ YES ☑ NO	A7. FREE LIQUIDS (Unless Wastewater) ☐ YES ☑ NO	A8. RCRA WASTE ☐ YES ☑ NO	A9. TSCA WASTE ☐ YES ☑ NO

A10. WASTE VARIANCE REQUEST NUMBER(S)

A11. CHELATING AGENTS ☐ YES ☑ NO	A12. ION EXCHANGE RESINS ☐ YES ☑ NO	A13. DETECTABLE PCB (Concen. And Source <50 ppm) ☐ YES ☑ NO CONC. ppm	A14. WASTEWATER ☐ YES ☑ NO

RADIOISOTOPE DETERMINATION METHOD

DOCUMENT TYPE	DOCUMENT NUMBER
R1. ANALYSIS SAMPLE ID NO.	
R2. PROCESS KNOWLEDGE FORM NO.	210

R3. FISSILE CONTENT (Wt% U-235)	R4. GRAMS U-235	R5. NCS EXEMPT ☑ YES ☐ NO	R5. CHEMICAL FORM

OTHER SAMPLE ANALYSIS

DOCUMENT TYPE	DOCUMENT NUMBER
01. ANALYSIS SAMPLE ID NO.	
02. PROCESS KNOWLEDGE FORM NO.	

RADIATION DATA FROM HEALTH PHYSICS SURVEY SURFACE CONTAMINATION (Data Supplied by HP)

R7. HP SURVEY REQUIRED ☐ YES ☐ NO

R8. TRANSFERABLE (Alpha) dpm/100cm2	R9. FIXED (Alpha) dpm/100cm2
R10. TRANSFERABLE (Beta/Gamma) dpm/100cm2	R11. FIXED (Beta/Gamma) dpm/100cm2
R12. EXTERNAL DOSE/PACKAGE CONTACT MREM/HR	R13. DOSE RATE MREM/HR @ METERS (B/G)
R14. HP SIGNATURE	R15. SURVEY NUMBER

WASTE ITEM CONTAINER LOG

10. ITEM/CONTAINER	OF	DOCUMENT ID NUMBER
1	1	110464

11 WASTE ITEM ID NO	12 ORIGIN DATE	13 RCRA ACCUMULATION START DATE	14 PCB DATE TO STORAGE
110464-01	8/8/01	N/A	N/A

15. WASTE MATERIAL PLACED IN (Or Removed From) CONTAINER	16. QUANTITY	17. DEPOSITOR INITIAL	17. DEPOSITOR DATE	18. COMMENTS (If Waste is removed from container, then final disposition must be noted.)
Converter Saddle	1	JR	8/8/01	C-333-09-016 Zone 2

19 CONTAINER ID NO (Barcode)	110 ABSORBENT MATERIALS? ☐ YES ☑ NO	QUANTITY	TYPE	111 NMC&A FORM	112 EST NET VOLUME	113 UNITS
DNSA 0110814						

114 GROSS WEIGHT	115 UNITS	116 INNER CONTAINER TYPE	117 OUTER CONTAINER TYPE	118 TANK SEAL NUMBER

119 CONTAINER GENERATOR SIGNATURE: Jeni Ross

DATE: 8/8/01

UCN-20700 PAGE 2

DMSA/D&D NICS-Restricted Area Item - NCS Characterization Form

ITEM	INITIAL CHARACTERIZATION	ANALYTICAL CHARACTERIZATION: ^{235}U Assay Analysis	^{235}U Mass Analysis	Subcritical Mass Limits	NDA Quantification Surveys	NCS CLASSIFICATION
Unique ID #: RFD 1CA6A Description: CONVERTER SADDLE	Historical Documentation: _____	Sample A: _____ ____ % ^{235}U ____ 1 sigma (% ^{235}U) ____ 2 sigma (% ^{235}U) ____ Total (^{235}U + 2 sigma)	Sample A: _____ ____ g ^{235}U	____ kg ^{235}U ____ Moderated Limits ____ Dry Limits	Sample A: Date & Time Performed: __/__/__ ____ am/pm Date & Time Results Rec'd: __/__/__ ____ am/pm Assumed Assay: ____ % ^{235}U Mass: ____ g ^{235}U Submitted By: _____ Date: _____	Initial: Reclassification: ✓ NCS-Exempt ____ ____ Spacing-Controlled ____ ____ Singularly-Contingent ____ DMSA/DRA Inspector: [signature] Date: 8/27/01 NCS Engineer: _____ (If Spacing-Controlled or Singularly-Contingent item is involved) Date: _____ NDA Expert: _____ (if NDA is performed) Date: _____
Independent Confirmations: Individual #1: [signature] Date: 8/27/01 Individual #2: [signature] Date: 8-28-01	Process Knowledge: _____	Sample B: _____ ____ % ^{235}U ____ 1 sigma (% ^{235}U) ____ 2 sigma (% ^{235}U) ____ Total (^{235}U + 2 sigma)	Sample B: _____ ____ g ^{235}U		Sample B: Date & Time Performed: __/__/__ ____ am/pm Date & Time Results Rec'd: __/__/__ ____ am/pm Assumed Assay: ____ % ^{235}U Mass: ____ g ^{235}U Submitted By: _____ Date: _____	Independent Verifications: (BEFORE movement) Person #1: _____ Date: _____ Person #2: _____ Date: _____ Independent Verifications: (AFTER movement) Person #1: _____ Date: _____ Person #2: _____ Date: _____
Other Information: Bldg./Col.: C-331-45 DMSA #: 331-09 Origin: NA	Visual Inspections Completed: ____ External Surfaces Inspection ____ Internal Surfaces Inspection Completed By: _____ Date: _____					

Comments: NCS: EXEMPT BY PREVIOUS CHARACTERIZATION (DMSA# 331-09-016)
REFER TO ATTACHED SHEETS FOR DETAILED INFORMATION

Approved to Relocate: To _____	I have independently confirmed the **identification and description** for this NCS-Exempt or Spacing-Controlled Item against the written instructions and find this information to match.	I have independently confirmed the **destination** for this NCS-Exempt or Spacing-Controlled Item against the written instructions and find this information to match.
Further NCS characterization is required. Item does not contain Singularly-Contingent mass. NDA Expert #1: _____ Date: _____ NDA Expert #2: _____ Date: _____ DMSA/DRA Inspector: _____ Date: _____ NCS Engineer: _____ Date: _____	Independent Person #1: _____ Date: _____ Independent Person #2: _____ Date: _____	Independent Person #1: _____ Date: _____ Independent Person #2: _____ Date: _____

(PA-3003A - Rev. 4 - 07/2001)

Document ID Nun
140465

Request **For Disposal**

Generation Process Information

W1 Generator's Name (Print)	W2. Badge No.	W3. Generator's Phone No	W3 Mail Stop	W5 Charge No
Terri Ross	31871	5325	C7431	

W6 Generator's Company	W7 Corp Owner	W8. Origin Site	W9 Origin Facility	W10 Origin Area	W11 Rad Area?
WESKEM	DOE	PGDP	C-331	C-331-09	☒ Yes ☐

W12. Number of Items	W13. Process Category (GCC)	W14. Process Activity Code	W15. AWA Number	W16. Physical F
1	LEG	A93	N/A	Solid

	W18. Holding S
M	PGDP

	Yes	No		Yes	No		Yes	No		Yes
N22. Biological		✓	W25. Const. Debris		✓	W28. Non-Friable Asbestos		✓	W31. DMSA	✓
N23. Accountable		✓	W26. Classified		✓	W29. TRU Waste		✓		
N24. Carcinogen		✓	W27. Friable Asbestos		✓	W30. CERCLA		✓		

Waste Description / Comments

W32. DMSA 0110815 Zone 12 EST 8/29/01
17" blank flange
old# 331-09-017

This is to certify that the above named material is properly described and in the stated container, which is in good condition, mar with the RFD number, content, appropriate generation date, source location, and at the stated location.

W33. Generation Plan No.	W34. Generator's Signature	Date
	Terri Ross	8/8/01

Handling / Pickup Information (Completed by Waste Management)

P1. Pick-up Site	P2. Pick-up Facility	P3. Pick-up Room/Area

P4. PPE Requirements

P5. Container-Labeling Requirements

___ **RCRA**	___ PCB	___ DET PCB (<50ppm & source <50ppm)	___ **RAD**	___ **DOE**
___ **FISSILE**	___ NCS EXEMPT	___ RD CONFIDENTIAL	___ ACID	___ **USEC**
___ FLAMMABLE	___ COMBUSTIBLE	___ OXIDIZER	___ BASE	___ WESK
___ ASBESTOS	___ REACTIVE	___ TRANSURANIC	___ NON-HAZ	

P6. Additional Handling Instructions
Verify labeling, barcode & verify zone

Reference FWR	
Origin Date	
PCB Start Date	
RCRA Start Date	

P7. Waste Coordinator (Issued By)	Badge	Date	P8. Disposal/Storage Completed By	Badge	Date
Terri Ross	31871	8/8/01	Paul Allen	204290	8/8/
P9. Field Supervisor	**Badge**	**Date**	**P10. Data Processing Completed By**	**Badge**	**Date**
C M Tarry	13650	9/4/01	Chi Walker	705451	5-4-0

P11. Waste Item Information

Waste Item No. 110465-01
Container No. (Barcode) 0110815
Weir ~~[illegible] lb~~ 100 lbs EST 8/15/01
Loca and Grid C-331-09 Zone 12 EST 8/29/01
Container Size ~~2.5 ft3~~ 2.5 ft³

P12. Operator Comments

aJCF-515a **(0301)**

LOW-LEVEL RADIOACTIVE WASTE

ATTACHMENT A

DOCUMENT ID NUMBER 110465

-OTHER THAN RADIOACTIVE FORMS OF ISOTOPES ☐ YES ☑ NO	☐ YES ☑ NO	☐ YES ☑ NO	☐ YES ☑ NO	
A5. ETILOGICAL AGENTS ☐ YES ☑ NO	A6. IGNITION SOURCES ☐ YES ☑ NO	A7. FREE LIQUIDS (Unless Wastewater) ☐ YES ☑ NO	A8. RCRA WASTE ☐ YES ☑ NO	A9. TSCA WASTE ☐ YES ☑ NO

ADDITIONAL WASTE CHARACTERISTICS

A11. CHELATING AGENTS ☐ YES ☑ NO	A12. ION EXCHANGE RESINS ☐ YES ☑ NO	A13. DETECTABLE PCB (Concen. And Source >50 ppm) ☐ YES ☑ NO CONC. ppm	A14. WASTEWATER ☐ YES ☑ NO

DOCUMENT TYPE	DOCUMENT NUMBER		
R1. ANALYSIS SAMPLE ID NO.			
R2. PROCESS KNOWLEDGE FORM NO.	210		
R3. FISSILE CONTENT (Wt% U-235)	R4. GRAMS U-235	R5. NCS EXEMPT ☑ YES ☐ NO	R5. CHEMICAL FORM

DOCUMENT TYPE	DOCUMENT NUMBER
01. ANALYSIS SAMPLE ID NO.	
02. PROCESS KNOWLEDGE FORM NO.	210 EGJ 9/4/01

R8. TRANSFERABLE (Alpha) dpm/100cm2	R9. FIXED (Alpha) dpm/100cm2
dpm/100cm2	dpm/100cm2
R12. EXTERNAL DOSE/PACKAGE CONTACT MREM/HR	R13. DOSE RATE MREM/HR @ METERS (B/G)
R14. HP SIGNATURE	R15. SURVEY NUMBER

WASTE ITEM CONTAINER LOG

10. ITEM/CONTAINER	OF 1	DOCUMENT ID NUMBER 1104405

11 WASTE ITEM ID NO	12 ORIGIN DATE 8/8/01	13 RCRA ACCUMULATION START DATE	14 PCB DATE TO STORAGE N/A

15. WASTE MATERIAL PLACED IN (Or Removed From) CONTAINER	16. QUANTITY	17. DEPOSITOR INITIAL	17. DEPOSITOR DATE	18. COMMENTS (if Waste is removed from container, then final disposition must be noted.)
17" BLANK flange	1	JR	8/8/01	C-333-09-017 Zone 2

19 CONTAINER ID NO (Barcode)	110 ABSORBENT MATERIALS? YES NO	QUANTITY	TYPE	111 NMC&A FORM	112 EST NET VOLUME	113 UNITS
TMSA0110815						

114 GROSS WEIGHT	115 UNITS	116 INNER CONTAINER TYPE	117 OUTER CONTAINER TYPE	118 TANK SEAL NUMBER

119 CONTAINER GENERATOR SIGNATURE: Deni Rosa

DATE: 8/8/01

UCN-20700 PAGE 2

DMSA/D&D NCS-Restricted Area Item - NCS Characterization Form

ITEM	INITIAL CHARACTERIZATION	ANALYTICAL CHARACTERIZATION: ^{235}U Assay Analysis	^{235}U Mass Analysis	Subcritical Mass Limits	NDA Quantification Surveys	NCS CLASSIFICATION
Unique ID #: RF-RELEASES Description: 12" BLANK FLANGE Independent Confirmations: Individual #1: [illegible] Date: 8/7/01 Individual #2: Date Other Information: Bldg./Col.: C-331-SK DMSA #: 331-09 Origin: N/A	Historical Documentation: Process Knowledge: Visual Inspections Completed: External Surfaces Inspection Internal Surfaces Inspection Completed By: Date:	Sample A: % ^{235}U 1 sigma (% ^{235}U) 2 sigma (% ^{235}U) Total (^{235}U + 2 sigma) Sample B: % ^{235}U 1 sigma (% ^{235}U) 2 sigma (% ^{235}U) Total (^{235}U + 2 sigma)	Sample A: g ^{235}U Sample B: g ^{235}U	kg ^{235}U Moderated Limits Dry Limits	Sample A: Date & Time Performed: __/__/__ ____am/pm Date & Time Results Rec'd: __/__/__ ____am/pm Assumed Assay: ____ % ^{235}U Mass: ____ g ^{235}U Submitted By: Date: Sample B: Date & Time Performed: __/__/__ ____am/pm Date & Time Results Rec'd: __/__/__ ____am/pm Assumed Assay: ____ % ^{235}U Mass: ____ g ^{235}U Submitted By: Date:	Initial: Reclassification: ✓ NCS-Exempt Spacing-Controlled Singularly-Contingent DMSA/DRA Inspector: [illegible] Date: 8/07/01 NCS Engineer: (If Spacing-Controlled or Singularly-Contingent item is involved) Date: NDA Expert: (If NDA's performed) Date: Independent Verifications: (BEFORE movement) Person #1: Date: Person #2: Date: Independent Verifications: (AFTER movement) Date: Date:

Comments: NCS EXEMPT BY PREVIOUS CHARACTERIZATION (DMSA# 331-09-017)
REFER TO ATTACHED SHEETS FOR DETAILED INFORMATION

Approved to Relocate: To
Further NCS characterization is required. Item does not contain Singularly-Contingent mass.
#1: Date:
#2: Date:
NDA Expert #2: Date:
DMSA/DRA Date:
Date:
Date:

I have independently confirmed the identification and description for this NCS-Exempt or Spacing-Controlled Item against the written instructions and find this information to match.
Independent Person #1:
Date:
Independent Person #2:
Date:

I have independently confirmed the destination for this NCS-Exempt or Spacing-Controlled Item against the written instructions and find this information to match.
Independent Person #1:
Date:
Independent Person #2:
Date:

(PA-3003A • Rev. 4 - 07/2001)

Request For Disposal

Document ID N
110461

Generation Process Information (Completed by Generator)

W1. Generator's Name (Print)	W2. Badge No.	W3. Generator's Phone No.	W3. Mail Stop	W5. Charge N
Terri Ross	31871	5325	C-7431	

W6. Generator's Company	W7. Corp Owner	W8. Origin Site	W9. Origin Facility	W10. Origin Area	W11. Rad Area
WESKEM	DOE	PGDP	C-331	C-331-09	☒ Yes

W12. Number of Items	W13. Process Category (GCC)	W14. Process Activity Code	W15. AWA Number	W16. Physical
	LEG	A93	N/A	Solid

W17. Material Type(s)	W18. Holding Site	W19. Holding Facility	W20. Holding Area	W21 RFD Attac
MT007	PGDP	C-331	C-331-09	☒ A ☐ B

Waste Subcategories (Check all that apply)

	Yes	No		Yes	No		Yes	No		Yes
W22. Biological		✓	W25. Const. Debris		✓	W28. Non-Friable Asbestos		✓	W31. DMSA	
W23. Accountable		✓	W26. Classified		✓	W29. TRU Waste		✓		
W24. Carcinogen		✓	W27. Friable Asbestos		✓	W30. CERCLA		✓		

Waste Description / Comments

W32. DMSA 0110816 zone 12 EJT 8/29/01
20" blank flange
old # 331-09-018

This is to certify that the above named material is properly described and in the stated container, wh ich is in good condition, ma with the RFD number, content, appropriate generation date, source location, and at the stated location.

W33. Generation Plan No.	W34. Generator's Signature	Date
	Terri Ross	8/8/01

Handling / Pickup Information (Completed by Waste Management)

P1. Pick-up Site	P2. Pick-up Facility	P3. Pick-up Room/Area

P4. PPE Requirements

P5. Container-Labeling Requirements

___ RCRA	___ PCB	___ DET PCB (<50ppm & source <50ppm)	___ RAD	___ DOE
___ FISSILE	___ NCS EXEMPT	___ RD CONFIDENTIAL	___ ACID	___ USEC
___ FLAMMABLE	___ COMBUSTIBLE	___ OXIDIZER	___ BASE	___ WESK
___ ASBESTOS	___ REACTIVE	___ TRANSURANIC	___ NON-HAZ	

P6. Additional Handling Instructions
Verify labeling, barcode + verify zone

Reference FWR
Origin Date
PCB Start Date
RCRA Start Date

P7. Waste Coordinator (Issued By)	Badge	Date	P8. Disposal/Storage Completed By	Badge	Date
Terri Ross	31871	8/8/01	Paul [illegible]	704290	8/9/

P9. Field Supervisor	Badge	Date	P10. Data Processing Completed B	Badge	Date
[illegible]	13656	9/4/01	[illegible]	705451	9-4-01

P11. Waste Item Information
110466-01
Container No. (Barcode) 0110816 EJT 10/15/01
Weight ~~20 LB~~ 100 lbs
C-331-09 Zone 12 EJT 8/29/01
Container Size ~~1 ft³~~ .5 ft³ EJT 10/15/

P12. Operator Comment

BJCF-515a (03/01)

LOW-LEVEL RADIOACTIVE WASTE

ATTACHMENT A

DOCUMENT ID NUMBER 1104466

A1 PYROPHORIC MATERIALS -OTHER THAN RADIOACTIVE FORMS OF ISOTOPES ☐ YES ☑ NO	A2 ACTIVE CHELATING AGENTS ☐ YES ☑ NO	A3 TRU RADIOISOTOPES >100 nCi/g ☐ YES ☑ NO	A4 EXPLOSIVE MATERIALS ☐ YES ☑ NO
A5. ETILOGICAL AGENTS ☐ YES ☑ NO	A6. IGNITION SOURCES ☐ YES ☑ NO	A7. FREE LIQUIDS (Unless Wastewater) ☐ YES ☑ NO	A8. RCRA WASTE ☐ YES ☑ NO / A9. TSCA WASTE ☐ YES ☑ NO

A11. CHELATING AGENTS ☐ YES ☑ NO	A12. ION EXCHANGE RESINS ☐ YES ☑ NO	A13. DETECTABLE PCB (Concen. And Source <50 ppm) ☐ YES ☑ NO CONC. ppm	A14. WASTEWATER ☐ YES ☑ NO

DOCUMENT TYPE	DOCUMENT NUMBER	
R1. ANALYSIS SAMPLE ID NO.		
R2. PROCESS KNOWLEDGE FORM NO.	210	
R3. FISSILE CONTENT (Wt% U-235)	R4. GRAMS U-235	R5. NCS EXEMPT ☑ YES ☐ NO / R5. CHEMICAL FORM

OTHER SAMPLE ANALYSIS

DOCUMENT TYPE	DOCUMENT NUMBER
01. ANALYSIS SAMPLE ID NO.	
02. PROCESS KNOWLEDGE FORM NO.	210 EJD 9/4/01

RADIATION DATA FROM HEALTH PHYSICS SURVEY SURFACE CONTAMINATION (Data Supplied by HP)

R7. HP SURVEY REQUIRED ☐ YES ☐ NO

R8. TRANSFERABLE (Alpha) dpm/100cm2	R9. FIXED (Alpha) dpm/100cm2
R10. TRANSFERABLE (Beta/Gamma) dpm/100cm2	R11. FIXED (Beta/Gamma) dpm/100cm2
R12. EXTERNAL DOSE/PACKAGE CONTACT MREM/HR	R13. DOSE RATE MREM/HR @ METERS (B/G)
R14. HP SIGNATURE	R15. SURVEY NUMBER

WASTE ITEM CONTAINER LOG

10. ITEM/CONTAINER			DOCUMENT ID NUMBER
1 OF 1			110466
11. WASTE ITEM ID NO	12. ORIGIN DATE	13. RCRA ACCUMULATION START DATE	14. PCB DATE TO STORAGE
110466-01	8/8/01	N/A	N/A

15. WASTE MATERIAL PLACED IN (Or Removed From) CONTAINER	16. QUANTITY	17. DEPOSITOR		18. COMMENTS (If Waste is removed from container, then final disposition must be noted.)
		INITIAL	DATE	
20" BLANK Flange	1	JR	8/8/01	C-331-09-018 Zone 2

19. CONTAINER ID NO (Barcode)	110. ABSORBENT MATERIALS?	QUANTITY	TYPE	111. NMC&A FORM	112. EST. NET VOLUME	113. UNITS
NSA0110816	[ ] YES [✓] NO					
114. GROSS WEIGHT	115. UNITS	116. INNER CONTAINER TYPE		117. OUTER CONTAINER TYPE	118. TANK SEAL NUMBER	
119. CONTAINER GENERATOR SIGNATURE: Dan Ross					DATE 8/8/01	

CN 20700 PAGE 2

DMSA/D&D NCS-Impacted Area Item - NCS Characterization Form

ITEM	INITIAL CHARACTERIZATION	ANALYTICAL CHARACTERIZATION: ^{235}U Assay Analysis	^{235}U Mass Analysis	Subcritical Mass Limits	NDA Quantification Surveys	NCS CLASSIFICATION
Unique ID # RED [illegible] Description: 20" BLANK FLANGE	Historical Documentation: _____	Sample A: ____ % ^{235}U ____ 1 sigma	Sample A: ____ g ^{235}U	____ kg$_{235}U$ ____ Moderated Limits ____ Dry Limits ____ Limits	Sample A: Date & Time Performed: ___/___/___ ____ am/pm Date & Time Results Rec'd: ___/___/___ ____ am/pm Assumed Assay: ____ % ^{235}U Mass: ____ g ^{235}U Submitted By: _____ Date: _____	Initial: Reclassification: ✓ NCS-Exempt ____ Spacing-Controlled ____ Singularly-Contingent ____ DMSA/DRA Inspector: [signature] Date: 3/17/01 NCS Engineer: _____ (If Spacing-Controlled or Singularly-Contingent item is involved) Date: _____ NDA Expert: _____ (if NDA is performed) Date: _____
Independent Confirmations: Independent Confirmations: Individual #1: [signature] Date: 3/17/01	Process Knowledge: Process Knowledge: _____	____ 2 sigma (% ^{235}U)a (% ^{235}U) ____ Total (^{235}U + 2 sigma)	Sample B: _____		Sample B: Date & Time Performed: ___/___/___ ____ am/pm Date & Time Results Rec'd: ___/___/___ ____ am/pm Assumed Assay: ____ % ^{235}U Mass: ____ g ^{235}U Submitted By: _____ Date: _____	Independent Verifications: (BEFORE movement) Person #1: _____ Date: _____ Person #2: _____ Date: _____ Independent Verifications: (AFTER movement) Person #1: _____ Date: _____ Person #2: _____ Date: _____
Other Information: Other Information: Bldg./Col.: C-331-S10 DMSA #: 331-09 Origin: N A	Visual Inspections Completed: ____ External Surfaces Inspection ____ Internal Surfaces Inspection Completed By: _____ Date: _____ Date: _____	Sample B: ____ % ^{235}U ____ 1 sigma (% ^{235}U) ____ 2 sigma (% ^{235}U) ____ Total (^{235}U + 2 sigma)				

Comments: NCS EXEMPT BY PREVIOUS CHARACTERIZATION (DMSA# 331-09-018) REFER TO ATTACHED SHEETS FOR DETAILED INFORMATION

Approved to Relocate: To _____
Further NCS characterization is required. Item does not contain Singularly-Contingent mass.
NDA Expert #1: _____ Date: _____
NDA Expert #2: _____ Date: _____
DMSA/DRA Inspector: _____ Date: _____
NCS Engineer: _____ Date: _____

I have independently confirmed the **identification and description** for this NCS-Exempt or Spacing-Controlled Item against the written instructions and find this information to match.
Independent Person #1: _____
Date: _____
Independent Person #2: _____
Date: _____

I have independently confirmed the **destination** for this NCS-Exempt or Spacing-Controlled Item against the written instructions and find this information to match.
Independent Person #1: _____
Date: _____
Independent Person #2: _____
Date: _____

Document ID N
11046

Request For Disposal

Generation Process

W1 Generator's Name (Print)	W2. Badge No	W3 Generator's Phone No	W3. Mail Stop	W5 Charge N
Terri	31871	5325	C7431	

W6 Generator's Company	W7 Corp Owner	W8 Origin Site	W9 Origin Facility	W10 Origin Area	W11 Rad Area
LMES/GM	DOE	PGDP	C-331	C-331-09	☐ Yes

W12 Number of Items	W13 Process Category (GCC)	W14 Process Activity Code	W15 AWA Number	W16 Physica
1	LEG	A93	N/A	Solid

W17 Material Type(s)	W18 Holding Site	W19. Holding Facility	W20. Holding Area	W21 RFD Attac
MT007	PGDP	C-331	C-331-09	☒ A ☐ B

	Yes	No		Yes	No		Yes	No		Yes
W22. Biological		✓	W25. Const. Debris		✓	W28. Non-Friable Asbestos		✓	W31. DMSA	✓
W23. Accountable		✓	W26. Classified		✓	W29. TRU Waste		✓		
W24. Carcinogen		✓	W27. Friable Asbestos		✓	W30. CERCLA				

W32. DMSA 0110817 zone 1/2 EJT 8/29/01
4" blank flange
AWA # 331-09-019

This is to certify that the above named material is properly described and in the stated container, which is in good condition, ma with the RFO number, content, appropriate generation date, source location, and at the stated location.

W33. Generation Plan No.	W34. Generator's Signature	Date
	Terri Ross	8/8/01

Handling / Pickup Information (Completed by Waste Management)

P1. Pick-up Site	P2. Pick-up Facility	P3. Pick-up Room/Area

P4. PPE Requirements

P5. Container-Labeling Requirements

___ RCRA	___ PCB	___ DET PCB (<50ppm & source <50ppm)	___ RAD	___ DOE
___ FISSILE	___ NCS EXEMPT	___ RD CONFIDENTIAL	___ ACID	___ USEC
___ FLAMMABLE	___ COMBUSTIBLE	___ OXIDIZER	___ BASE	___ WESK
___ ASBESTOS	___ REACTIVE	___ TRANSURANIC	___ NON-HAZ	

P6. Additional Handling Instructions
Verify labeling, barcode + verify zone.

Reference FWR
Origin Dat
PCB Start Date
RCRA Start Date

P7. Waste Coordinator (Issued By)	Badge	Date	P8. Disposal/Storage Completed By	Badge	Date
Terri Ross	31871	8/8/01	[illegible]	704290	8/9
P9. Field Supervisor	Badge	Date	P10. Data Processing Completed By	Badge	Date
C M Taylor	13656	9/4/01	[illegible]	705457	9-4-0

P11. Waste Item Information

Waste Item No. 110467-01
Container No. (Barcode) 0110817
Weight ~6 lb.
Location and Grid C-331-09 zone 1/2 EJT 8/29/01
Container Size ~.25 ft³

P12. Operator Comments

LOW-LEVEL RADIOACTIVE WASTE

ATTACHMENT A

DOCUMENT ID NUMBER 110467

A1 PYROPHORIC MATERIALS -OTHER THAN RADIOACTIVE FORMS OF ISOTOPES	A2. ACTIVE CHELATING AGENTS	A3. TRU RADIOISOTOPES>100 nCi/g	A4. EXPLOSIVE MATERIALS
☐ YES ☑ NO	☐ YES ☑ NO	☐ YES ☑ NO	☐ YES ☑ NO

A5. ETILOGICAL AGENTS	A6. IGNITION SOURCES	A7. FREE LIQUIDS (Unless Wastewater)	A8. RCRA WASTE	A9. TSCA WASTE
☐ YES ☑ NO	☐ YES ☑ NO	☐ YES ☑ NO	☐ YES ☑ NO	☐ YES ☑ NO

☐ YES ☑ NO	☐ YES ☑ NO	(Concen. And Source <50 ppm) ☐ YES ☑ NO ppm	☐ YES ☑ NO

DOCUMENT TYPE	DOCUMENT NUMBER		
R1. ANALYSIS SAMPLE ID NO.			
R2. PROCESS KNOWLEDGE FORM NO.	210		
R3. FISSILE CONTENT (Wt% U-235)	R4. GRAMS U-231	R5. NCS EXEMPT ☑ YES ☐ NO	R5. CHEMICAL FORM

DOCUMENT TYPE	DOCUMENT NUMBER
01. ANALYSIS SAMPLE ID NO.	
02. PROCESS KNOWLEDGE FORM NO.	210 [illegible] 9/4/01

RADIATION DATA FROM HEALTH PHYSICS SURVEY
SURFACE CONTAMINATION (Data Supplied by HP)

R7. HP SURVEY REQUIRED

☐ YES ☐ NO

R8. TRANSFERABLE (Alpha) dpm/100cm2	R9. FIXED (Alpha) dpm/100cm2
R10. TRANSFERABLE (Beta/Gamma) dpm/100cm2	R11. FIXED (Beta/Gamma) dpm/100cm2
R12. EXTERNAL DOSE/PACKAGE CONTACT MREM/HR	R13. DOSE RATE MREM/HR @ METERS (B/G)
R14. HP SIGNATURE	R15. SURVEY NUMBER

WASTE ITEM CONTAINER LOG

10. ITEM/CONTAINER		DOCUMENT ID NUMBER
1 OF 1		110467

11 WASTE ITEM ID NO	12 ORIGIN DATE	13 RCRA ACCUMULATION START DATE	14 PCB DATE TO STORAGE
110467-01	8/8/01	N/A	N/A

15. WASTE MATERIAL PLACED IN (Or Removed From) CONTAINER	16. QUANTITY	17. DEPOSITOR INITIAL	17. DEPOSITOR DATE	18. COMMENTS (If Waste is removed from container, then final disposition must be noted.)
4" BLANK FLANGE	1	JR	8/8/01	C-331-09-019 zone 2

19 CONTAINER ID NO (Barcode)	110 ABSORBENT MATERIALS?	QUANTITY	TYPE	111 NMC&A FORM	112 EST NET VOLUME	113 UNITS
MSA 0110817	☐ YES ☑ NO					

114 GROSS WEIGHT	115 UNITS	116 INNER CONTAINER TYPE	117 OUTER CONTAINER TYPE	118 TANK SEAL NUMBER

119 CONTAINER GENERATOR SIGNATURE: Glen Ross

DATE: 8/8/01

UCN-20700 PAGE 2

DMSA/D&D NCS-Restricted Area Item - NCS Characterization Form

ITEM	INITIAL CHARACTERIZATION	ANALYTICAL CHARACTERIZATION: ^{235}U Assay Analysis	^{235}U Mass Analysis	Subcritical Mass Limits	NDA Quantification	NCS CLASSIFICATION
Unique ID #: REDACT Description: 14" BLANK FLANGE	Historical Documentation:	Sample A: % ^{235}U 1 sigma (% ^{235}U) 2 sigma (% ^{235}U) Total (^{235}U + 2 sigma)	Sample A: g ^{235}U	kg ^{235}U Moderated Limits Dry Limits	Sample A: Date & Time Performed: __/__/__ ___am/pm Date & Time Results Rec'd: __/__/__ ___am/pm Assumed Assay: ___ % ^{235}U Mass: ___ g ^{235}U Submitted By: ___ Date: ___	Initial: Reclassification: NCS-Exempt Spacing-Controlled Singularly Contingent DMSA/DRA Inspector: [illegible] Date: 8/27/01 NCS Engineer: (If Spacing-Controlled or Singularly-Contingent item is involved) Date NDA Expert: (if NDA is performed) Date:
Independent Confirmations: Individual #1: [illegible] Date: 8/7/01 Individual #2: [illegible] Date: 8/7/01 **.******..	Process Knowledge:	Sample B: % ^{235}U 1 sigma (% ^{235}U) 2 sigma (% ^{235}U) Total (^{235}U + 2 sigma)	Sample B: g ^{235}U		Sample B: Date & Time Performed: __/__/__ ___am/pm Date & Time Results Rec'd: __/__/__ ___am/pm Assumed Assay: ___ % ^{235}U Mass: ___ g ^{235}U Submitted By: ___ Date: ___	Independent Verifications: (BEFORE movement) Person #1: Date: Person #2: Date: Independent Verifications: (AFTER movement) Person #1: Date: Person #2: Date:
Other Information: Bldg./Col.: C-331-SIC DMSA #: 331-09 Origin: NA	Visual Inspections Completed: External Surfaces Inspection Internal Surfaces Inspection Completed By: Date:					

Comments: NCS EXEMPT BY PREVIOUS CHARACTERIZATION (DMSA# 331-09-019)
DO NOT ATTACH ATTACHED SHEETS FOR DETAILED INFORMATION

Approved to Relocate: To ___ Further NCS characterization is required. Item does not contain Singularly-Contingent mass. NDA Expert #1: ___ Date: ___ NDA Expert #2: ___ Date: ___ NCS Engineer: ___ Date: ___	I have independently confirmed the **identification and description** for this NCS-Exempt or Spacing-Controlled Item against the written instructions and find this information to match. Independent Person #1: ___ Date: ___ Independent Person #2: ___ Date: ___	I have independently confirmed the **destination** for this NCS-Exempt or Spacing-Controlled Item against the written instructions and find this information to match. Independent Person #1: ___ Date: ___ Independent Person #2: ___ Date: ___

Request For Disposal

Document ID Num 110469

Generation Process Information (Completed by Generator)

W1 Generator's Name (Print): Terri Ross	W2. Badge No.: 31871	W3. Generator's Phone No.: 5325	W3. Mail Stop: C7431	W5. Charge No.	
W6. Generator's Company: WESKEM	W7. Corp Owner: DOE	W8. Origin Site: PGDP	W9. Origin Facility: C-331	W10. Origin Area: C-331-09	W11. Rad Area? ☒ Yes ☐
W12. Number of Items: 1	W13. Process Category (GCC): LEG	W14. Process Activity Code: A93	W15. AWA Number: N/A	W16. Physical Fo: Solid	
W17. Material Type(s): MT007	W18. Holding Site: PGDP	W19. Holding Facility: C-331	W20. Holding Area: C-331-09	W21 RFD Attachr ☒ A ☐ B ☐	

Waste Subcategories (Check all that apply)

	Yes	No		Yes	No		Yes	No		Yes	
W22. Biological		✓	W25. Const. Debris		✓	W28. Non-Friable Asbestos		✓	W31. DMSA	✓	
W23. Accountable		✓	W26. Classified		✓	W29. TRU Waste		✓			
W24. Carcinogen		✓	W27. Friable Asbestos		✓	W30. CERCLA		✓			

Waste Description / Comments

W32. DMSA 0110819 zone + 2 EJT 8/29/01
1" diameter choker, 8 ft. long
old # 331-09-021

This is to certify that the above named material is properly described and in the stated container, which is in good condition, mark with the RFD number, content, appropriate generation date, source location, and at the stated location.

W33. Generation Plan No.	W34. Generator's Signature: Terri Ross	Date: 8-8-01

Handling / Pickup Information (Completed by Waste Management)

P1. Pick-up Site	P2. Pick-up Facility	P3. Pick-up Room/Area
P4. PPE Requirements		

P5. Container-Labeling Requirements

___ RCRA	___ PCB	___ DET PCB (<50ppm & source <50ppm)	___ RAD	___ DOE
___ FISSILE	___ NCS EXEMPT	___ RD CONFIDENTIAL	___ ACID	___ USEC
___ FLAMMABLE	___ COMBUSTIBLE	___ OXIDIZER	___ BASE	___ WESKEI
___ ASBESTOS	___ REACTIVE	___ TRANSURANIC	___ NON-HAZ	

P6. Additional Handling Instructions

Verify labeling, barcode + verify labeling

Reference FWR
Origin Date
PCB Start Date
RCRA Start Date

P7. Waste Coordinator (Issued By): Terri Ross	Badge: 31871	Date: 8/8/01	P8. Disposal/Storage Completed By: Paul Allman	Badge: 708290	Date: 8/4/0
P9. Field Supervisor: C. M. Taylor	Badge: 136S6	Date: 9/4/01	P10. Data Processing Completed By: Ch Weller	Badge: 705451	Date: 9-4-01

P11. Waste Item Information

Waste Item No. 110469-01
Container No. (Barcode) 0110819
Weight ~ 25 LB
Location and Grid C-331-09 Zone + 2 EJT 8/29/01
Container Size ~~1 FT 3~~ .5 ft3 10/15/01

P12. Operator Comments

BJCF-515a (03/01)

LOW-LEVEL RADIOACTIVE WASTE

ATTACHMENT A

DOCUMENT ID NUMBER 110469

PROHIBITED ITEMS

A1. PYROPHORIC MATERIALS -OTHER THAN RADIOACTIVE FORMS OF ISOTOPES	A2. ACTIVE CHELATING AGENT:	A3. TRU RADIOISOTOPES>100 nCi/g	A4. EXPLOSIVE MATERIALS
☐ YES ☑ NO	☐ YES ☑ NO	☐ YES ☑ NO	☐ YES ☑ NO

A5. ETILOGICAL AGENTS	A6. IGNITION SOURCES	A7. FREE LIQUIDS (UnlessWastewater)	A8. RCRA WASTE	A9. TSCA WASTE
☐ YES ☑ NO	☐ YES ☑ NO	☐ YES ☑ NO	☐ YES ☑ NO	☐ YES ☑ NO

A10. WASTE VARIANCE REQUEST NUMBER(S)

☐ YES ☑ NO	☐ YES ☑ NO	☐ YES ☑ NO ppm	☐ YES ☑ NO

DOCUMENT TYPE	DOCUMENT NUMBER
R1. ANALYSIS SAMPLE ID NO.	
R2. PROCESS KNOWLEDGE FORM NO.	210

R3. FISSILE CONTENT (Wt% U-235)	R4. GRAMS U-235	R5. NCS EXEMPT	R5. CHEMICAL FORM
		☑ YES ☐ NO	

DOCUMENT TYPE	DOCUMENT NUMBER
01. ANALYSIS SAMPLE ID NO.	
02. PROCESS KNOWLEDGE FORM NO.	

R8. TRANSFERABLE (Alpha)	R9. FIXED (Alpha)
dpm/100cm2	dpm/100cm2
dpm/100cm2	dpm/100cm2
R12. EXTERNAL DOSE/PACKAGE CONTACT	R13. DOSE RATE
MREM/HR	MREM/HR @ METERS (B/G)
R14. HP SIGNATURE	R15. SURVEY NUMBER

WASTE ITEM CONTAINER LOG

10. ITEM/CONTAINER			DOCUMENT ID NUMBER
1 OF 1			110469
11 WASTE ITEM ID NO: 110469-01	12 ORIGIN DATE: 8/8/01	13 RCRA ACCUMULATION START DATE: N/A	14 PCB DATE TO STORAGE: N/A

15. WASTE MATERIAL PLACED IN (Or Removed From) CONTAINER	16. QUANTITY	17. DEPOSITOR INITIAL	17. DEPOSITOR DATE	18. COMMENTS (If Waste is removed from container, then final disposition must be noted.)
1 "Diameter Chocker, 8 Foot Long.	1	JR	8/8/01	C-331-09-021 Zone 2

19 CONTAINER ID NO (Barcode)	110 ABSORBENT MATERIALS?	QUANTITY	TYPE	111 NMC&A FORM	112 EST NET VOLUME	113 UNITS
SA 0110819	[ ] YES [ ] NO					
114 GROSS WEIGHT	115 UNITS	116 INNER CONTAINER TYPE		117 OUTER CONTAINER TYPE	118 TANK SEAL NUMBER	
119 CONTAINER GENERATOR SIGNATURE: Deni Ross					DATE: 8/8/01	

UCN-20700 PAGE 2

DMSA/D&D NCS-Restricted Area Item - NCS Characterization Form

ANALYTICAL CHARACTERIZATION

	INITIAL CHARACTERIZATION	^{235}U Assay	^{235}U Mass	Subcritical Mass Limits	NDA Quantification Surveys	NCS CLASSIFICATION
Unique ID # ITEM RFD1CA09 Description: 1" DIAMETER CHOKER ~ 8' LONG	Historical Documentation:	Analysis Sample A: % ^{235}U 1 sigma (% ^{235}U) 2 sigma (% ^{235}U)	Analysis Sample A: g ^{235}U	kg ^{235}U Moderated Limits Dry Limits	Sample A: Date & Time Performed: / / am/pm Date & Time Results Rec'd: Assumed Assay: % ^{235}U Mass: g ^{235}U Submitted By: Date:	Initial: Reclassification: NCS-Exempt Spacing-Controlled Singularly-Contingent DMSA/DRA Inspector: [illegible] Date: 8/07/01 NCS Engineer: NCS Engineer: (if Singularly-Controlled or Singularly-Contingent item is involved) Date NDA Expert: (if NDA is performed) Date:
Independent Confirmations: Individual #1: [illegible] Date: 8/7/01 Individual #2: [illegible] Date: 8/7/01	Process Knowledge:		Sample B: g ^{235}U		Sample B: Date & Time Performed: / / am/pm Date & Time Results Rec'd: / / am/pm Assumed Assay: % ^{235}U Mass: g ^{235}U Submitted By: Date:	Independent Verifications: (BEFORE movement) Person #1: Date: Person #2: Date: Independent Verifications: (AFTER movement) Date: Person #2: Date:
Other Information: Bldg./Col.: C-331-SIC DMSA #: 331-09 Origin: NA	Visual Inspections Completed: External Surfaces Inspection Internal Surfaces Inspection Completed By: Date:	% ^{235}U 1 sigma (% ^{235}U) 2 sigma (% ^{235}U) (^{235}U + 2 sigma)				

Comments: NCS EXEMPT BY PREVIOUS CHARACTERIZATION (DMSA# 331-09-021)
REFER TO ATTACHED SHEETS FOR DETAILED INFORMATION

Approved to Relocate: To
Further NCS characterization is required. Item does not contain Singularly-Contingent mass.
NDA Expert #1: Date:
NDA Expert #2: Date:
DMSA/DRA Inspector: Date:

I have independently confirmed the **identification and description** for this NCS-Exempt or Spacing-Controlled Item against the written [illegible]
Independent Person #1:
Date:
Independent Person #2:
Date:

I have independently confirmed the **destination** for this NCS-Exempt or Spacing-Controlled Item against the written instructions and find this [illegible]
Independent Person #1:
Date:
Independent Person #2:
Date:

Document ID Nu
110470

Request For Disposal

Generation Process Information (Completed by Generator)

W1 Generator's Name (Print)	W2. Badge No.	W3. Generator's Phone No.	W3. Mail Stop	W5. Charge No
Terri Ross	31871	5325	C7431	

W6. Generator's Company	W7. Corp Owner	W8. Origin Site	W9. Origin Facility	W10. Origin Area	W11. Rad Area?
WESKEM	DOE	PGDP	C-331	C-331-09	☒ Yes ☐

W12. Number of Items	W13. Process Category (GCC)	W14. Process Activity Code	W15. AWA Number	W16. Physical F
1	LEG	A93	N/A	Solid

W17. Material Type(s)	W18. Holding Site	W19. Holding Facility	W20. Holding Area	W21 RFD Attach
MT007	PGDP	C-331	C-331-09	☒ A ☐ B

Waste Subcategories (Check all that apply)

	Yes	No		Yes	No		Yes	No		Yes
W22. Biological		✓	W25. Const. Debris		✓	W28. Non-Friable Asbestos		✓	W31. DMSA	✓
W23. Accountable		✓	W26. Classified		✓	W29. TRU Waste		✓		
W24. Carcinogen		✓	W27. Friable Asbestos		✓	W30. CERCLA		✓		

Waste Description / Comments

W32. DMSA 0110820 zone + 2 EJ 8/29/0
17" blank flange
old # 331-09-022

This is to certify that the above named material is properly described and in the stated container, which is in good condition, mark with the RFD number, content, appropriate generation date, source location, and at the stated location.

W33. Generation Plan No.	W34. Generator's Signature	Date
	Terri Ross	8/8/01

Handling / Pickup Information (Completed by Waste Management)

P1. Pick-up Site	P2. Pick-up Facility	P3. Pick-up Room/Area

P4. PPE Requirements

P5. Container-Labeling Requirements

P6. Additional Handling Instructions
Verify labeling, barcode & verify zone

Reference FWR
Origin Date
PCB Start Date
RCRA Start Date

P7. Waste Coordinator (Issued By)	Badge	Date	P8. Disposal/Storage Completed By	Badge	Date
Terri Ross	31871	8/8/01	[illegible]	704287	8/10/01
P9. Field Supervisor	**Badge**	**Date**	**P10. Data Processing Completed By**	**Badge**	**Date**
CM Taylor	13686	9/4/01	[illegible]	705451	9-4-01

P11. Waste Item Information

Waste Item No. 110470
Container No. (Barcode) DMSA 0110820 10/15/01
Weight ~~[illegible]~~ 100 lbs EJ 10/1
Location and Grid 331-09 ZONE + 2 EJ 8/29/01
Container Size ~2.5 ft³

P12. Operator Comments
Reader #12

JCE 515a (03/01)

LOW-LEVEL RADIOACTIVE WASTE

ATTACHMENT A

DOCUMENT ID NUMBER 110470

A1. PYROPHORIC MATERIALS -OTHER THAN RADIOACTIVE FORMS OF ISOTOPES	A2 ACTIVE CHELATING AGENTS	A3. TRU RADIOISOTOPES>100 nCi/g	A4 EXPLOSIVE MATERIALS
☐ YES ☑ NO	☐ YES ☑ NO	☐ YES ☑ NO	☐ YES ☑ NO

A5. ETILOGICAL AGENTS	A6. 'IGNITION SOURCES	A7. FREE LIQUIDS (Unless Wastewater)	A8. RCRA WASTE	A 9 TSCA WASTE
☐ YES ☑ NO	☐ YES ☑ NO	☐ YES ☑ NO	☐ YES ☑ NO	☐ YES ☑ NO

A10. WASTE VARIANCE REQUEST NUMBER(S)

ADDITIONAL WASTE CHARACTERISTICS

A11. CHELATING AGENTS	A12. ION EXCHANGE RESINS	A13. DETECTABLE PCB (Concen. And Source <50 ppm) CONC.	A14. WASTEWATER
☐ YES ☑ NO	☐ YES ☑ NO	☐ YES ☑ NO ppm	☐ YES ☑ NO

DOCUMENT TYPE	DOCUMENT NUMBER
R1. ANALYSIS SAMPLE ID NO.	
R2. PROCESS KNOWLEDGE FORM NO.	210

R3. FISSILE CONTENT (Wt% U-235)	R4. GRAMS U-28	R5. NCS EXEMPT	R5. CHEMICAL FORM
		☑ YES ☐ NO	

DOCUMENT TYPE	DOCUMENT NUMBER
01. ANALYSIS SAMPLE ID NO.	
02. PROCESS KNOWLEDGE FORM NO.	

RADIATION DATA FROM HEALTH PHYSICS SURVEY SURFACE CONTAMINATION (Data Supplied by HP)

R7. HP SURVEY REQUIRED

☐ YES ☐ NO

R8. TRANSFERABLE (Alpha) dpm/100cm2	R9. FIXED (Alpha) dpm/100cm2
R10. TRANSFERABLE (Beta/Gamma) dpm/100cm2	R11. FIXED (Beta/Gamma) dpm/100cm2
R12. EXTERNAL DOSE/PACKAGE CONTACT MREM/HR	R13. DOSE RATE MREM/HR @ METERS (B/G)
R14. HP SIGNATURE	R15. SURVEY NUMBER

WASTE ITEM CONTAINER LOG

10. ITEM/CONTAINER			DOCUMENT ID NUMBER
1 OF 1			110470
11. WASTE ITEM ID NO: 110470-01	12. ORIGIN DATE: 8/8/01	13. RCRA ACCUMULATION START DATE: N/A	14. PCB DATE TO STORAGE: N/A

15. WASTE MATERIAL PLACED IN (Or Removed From) CONTAINER	16. QUANTITY	17. DEPOSITOR INITIAL	17. DEPOSITOR DATE	18. COMMENTS (If Waste is removed from container, then final disposition must be noted.)
17" BLANK FLANGE	1	JR	8/8/01	C-331-09-022 zone 2

19. CONTAINER ID NO (Barcode)	110. ABSORBENT MATERIALS? ☐ YES ☐ NO	QUANTITY	TYPE	111. NMC&A FORM	112. EST. NET VOLUME	113. UNITS
MSA 0110820						

114. GROSS WEIGHT	115. UNITS	116. INNER CONTAINER TYPE	117. OUTER CONTAINER TYPE	118. TANK SEAL NUMBER

119. CONTAINER GENERATOR SIGNATURE: Sheri Ross

DATE: 8/8/01

UCN-20700 PAGE 2

DMSA/D&D NCS-Restricted Area Item - NCS Characterization Form

ITEM	INITIAL CHARACTERIZATION	ANALYTICAL CHARACTERIZATION				NCS CLASSIFICATION
		^{235}U Assay Analysis	^{235}U Mass Analysis	Subcritical Mass Limits	NDA Quantification Surveys	
Unique ID #: REDIKATC Description: 17" BLANK FLANGE Independent Confirmations: Individual #1: [illegible] Date: 8-23-01 Individual #2: HCHwdersen Date: 8-23-01 . . . . . . Other Information: Bldg./Col.: C-3331 T/K DMSA #: 3331-C5 Origin: N/A	Historical Documentation: ____ Process Knowledge: ____ Visual Inspections Completed: ____ External Surfaces Inspection ____ Internal Surfaces Inspection Completed By: ____ Date: ____	Sample A: ____ 1 sigma (% ^{235}U) ____ 2 sigma (% ^{235}U) ____ Total (^{235}U + 2 sigma) Sample B ____ % ^{235}U ____ 1 sigma (% ^{235}U) ____ 2 sigma (% ^{235}U) ____ Total (^{235}U + 2 sigma)	Sample A: ____ g ^{235}U Sample B: ____ g ^{235}U	____ kg ^{235}U ____ ,Moderated Limits ____ Dry Limits	Sample A: Date & Time Performed: __/__/__ ____ am/pm Date & Time Results Rec'd: __/__/__ ____ am/pm Assumed Assay: ____ % ^{235}U Mass: ____ g ^{235}U Submitted By: ____ Date: ____ Sample B: Date & Time Performed: __/__/__ ____ am/pm Date & Time Results Rec'd: __/__/__ ____ am/pm Assumed Assay: ____ % ^{235}U Mass: ____ g ^{235}U Submitted By: ____ Date: ____	Initial: Reclassification: ✓ NCS-Exempt ____ ____ Spacing-Controlled ____ ____ Singularly-Contingent ____ DMSA/DRA Inspector: [illegible] Date: 8/10/01 NCS Engineer: ____ (If Spacing-Controlled or Singularly-Contingent item is involved) Date: ____ NDA Expert: ____ (if NDA is performed) Date: ____ Independent Verifications: (BEFORE movement) Person #1: ____ Date: ____ Person #2: ____ Date: ____ Independent Verifications: (AFTER movement) Person #1: ____ Date: ____ Person #2: ____ Date: ____

Comments: NCS EXEMPT BY PREVIOUS CHARACTERIZATION (DMSA # 331-C9-022)
REFER TO ATTACHED SHEETS FOR DETAILED INFORMATION.

Approved to Relocate: To ____ Further NCS characterization is required. Item does not contain Singularly-Contingent mass. NDA Expert #1: ____ Date: ____ NDA Expert #2: ____ Date: ____ DMSA/DRA Inspector: ____ Date: ____ NCS Engineer: ____ Date: ____	I have independently confirmed the **identification and** description for this NCS-Exempt or **Spacing-Controlled Item** against the written instructions and find this information to match. Independent Person #1: ____ Date: ____ Independent Person #2: ____ Date: ____	I have independently confirmed the destination for this NCS-Exempt or Spacing-Controlled Item against the written instructions and find this information to match. Independent Person #1: ____ Date: ____ Independent Person #2: ____ Date: ____

(PA-3003A - Rev. 3 - 07/2001)

Request t-or Disposal

Document ID Nu
110471

Generation Process Information (Completed by Generator)

Generator's Name (Print): Terri Ross	W2. Badge No.: 31871	W3 Generator's Phone No.: 0325	W3. Mail Stop: C7431	W5 Charge No
W6. Generator's Company: WESKEM	W7. Corp Owner: DOE	W8. Origin Site: PGDP	W9. Origin Facility: C-331	W10. Origin Area: C-331-09
W11. Rad Area: ☒ Yes ☐	W12. Number of Items: 1	W13. Process Category (GCC): LEG	W14. Process Activity Code: A93	W15. AWA Number: N/A
W16. Physical F: Solid	W17. Material Type(s): MT007	W18. Holding Site: PGDP	W19. Holding Facility: C-331	W20. Holding Area: C-331-09
W21 RFD Attach: ☒ A ☐ B				

Waste Subcategories (Check all that apply)

	Yes	No		Yes	No		Yes	No		Yes
W22. Biological		✓	W25. Const. Debris		✓	W28. Non-Friable Asbestos		✓	W31. DMSA	✓
W23. Accountable		✓	W26. Classified		✓	W29. TRU Waste		✓		
W24. Carcinogen		✓	W27. Friable Asbestos		✓	W30. CERCLA		✓		

Waste Description / Comments

W32. DMSA 0110821 zone + 2 EJT 8/29/01
17" blank flange
old# 331-09-023

This is to certify that the above named material is properly described and in the state container, which is in good condition, mark with the RFD number, content, appropriate generation date, source location, and at the stated location.

W33. Generation Plan No.	W34. Generator's Signature	Date
	Terri Ross	8/8/01

Handling / Pickup Information (Completed by Waste Management)

P1. Pick-up Site	P2. Pick-up Facility	P3. Pick-up Room/Area

5. Container-Labeling Requirements

___ RCRA	___ PCB	___ PCB (<50ppm & source <50ppm)	___ RAD	___ DOE
___ FISSILE	___ NCS EXEMPT	___ RDCONFIDENTIAL	___ ACID	___ USEC
___ FLAMMABLE	___ COMBUSTIBLE	___ OXIDIZER	___ BASE	___ WESKE
___ ASBESTOS	___ REACTIVE	___ TRANSURANIC	___ NON-HAZ	

6. Additional Handling Instructions

Verify labeling, barcode + verify zone

Reference FWR

Origin **Date**

PCB Start Date

RCRA Start Date

P7. Waste Coordinator (Issued By)	Badge	Date	P8. Disposal/Storage Completed By	Badge	Date
Terri Ross	31871	8/8/01	[illegible]	204287	8/10/01
P9. Field Supervisor	**Badge**	**Date**	**P10. Data Processing Completed By**	**Badge**	**Date**
[illegible]	13656	9/4/01	[illegible]	105451	9-4-01

P11. Waste Item Information

Waste Item No. 110470
Container No. (Barcode) DMSA 0110821
Weigh ~~16 LB~~ 100 lbs. EJT 10/15/01
Location and Grid 331-09 ZONE + 2 EJT 8/29/01
Container Size ~ .5 ft³

P12. Operator Comments

ROADSIDE # R

BJCF-515a (03/01)

LOW-LEVEL RADIOACTIVE WASTE

DOCUMENT ID NUMBER: 110471

A1. PYROPHORIC MATERIALS -OTHER THAN RADIOACTIVE FORMS OF ISOTOPES	A2 ACTIVE CHELATING AGENTS	A3 TRU RADIOISOTOPES >100 nCi/g	A4. EXPLOSIVE MATERIALS
☐ YES ☑ NO	☐ YES	☐ YES ☑ NO	☐ YES ☑ NO

A5. ETILOGICAL AGENTS	A6. IGNITION SOURCES	A7. FREE LIQUIDS (Unless Wastewater)	A8. RCRA WASTE	A9. TSCA WASTE
D Y E S ☑ NO	D Y E S ☑ NO	☐ YES ☑ NO	☐ YES ☑ NO	☐ YES ☑ NO

ADDITIONAL WASTE CHARACTERISTICS

A11. CHELATING AGENTS	A12. ION EXCHANGE RESINS	A13. DETECTABLE PCB (Concen. And Source <50 ppm)	CONC.	A14. WASTEWATER
☐ YES ☑ NO	☐ YES ☑ NO	☐ YES ☑ NO	ppm	☐ YES ☑ NO

RADIOISOTOPE DETERMINATION METHOD

DOCUMENT TYPE	DOCUMENT NUMBER
R1. ANALYSIS SAMPLE ID NO.	
R2. PROCESS KNOWLEDGE FORM NO.	210

R3. FISSILE CONTENT (Wt% U-235)	R4. GRAMS U-235	R5. NCS EXEMPT / EXEMPT	R5. CHEMICAL FORM

DOCUMENT TYPE	DOCUMENT NUMBER
01. ANALYSIS SAMPLE ID NO.	
02. PROCESS KNOWLEDGE FORM NO.	210 481 01

RADIATION DATA FROM HEALTH PHYSICS SURVEY SURFACE CONTAMINATION (Data Supplied by HP)

R7. HP SURVEY REQUIRED ☐ YES ☐ NO

R8. TRANSFERABLE (Alpha) dpm/100cm2	R9. FIXED (Alpha) dpm/100cm2
R10. TRANSFERABLE (Beta/Gamma) dpm/100cm2	R11. FIXED (Beta/Gamma) dpm/100cm2
R12. EXTERNAL DOSE/PACKAGE CONTACT MREM/HR	R13 DOSE RATE MREM/HR @ METERS (B/G)
R14. HP SIGNATURE	R15. SURVEY NUMBER

WASTE ITEM CONTAINER LOG

10. ITEM/CONTAINER			DOCUMENT ID NUMBER
1 OF 1			110471
11 WASTE ITEM ID NO	12 ORIGIN DATE	13 RCRA ACCUMULATION START DATE	14 PCB DATE TO STORAGE
110471-01	8/8/01	N/A	N/A

15. WASTE MATERIAL PLACED IN (Or Removed From) CONTAINER	16. QUANTITY	17. DEPOSITOR		18. COMMENTS (If Waste is removed from container, then final disposition must be noted.)
		INITIAL	DATE	
17" BLANK FLANGE	1	JR	8/8/01	C-331-09-023
				Zone 2

19 CONTAINER ID NO (Barcode)	110 ABSORBENT MATERIALS? ☐ YES ☑ NO	QUANTITY	TYPE	111 NMC&A FORM	112 EST NET VOLUME	113 UNITS
OMSA 0110821						

114 GROSS WEIGHT	115 UNITS	116 INNER CONTAINER TYPE	117 OUTER CONTAINER TYPE	118 TANK SEAL NUMBER

119 CONTAINER GENERATOR SIGNATURE: Dennis Ross

DATE: 8/8/01

UCN 20700 PAGE 2

DMSA/D&D NCS-Restricted Area Item - NCS Characterization Form

ITEM	INITIAL CHARACTERIZATION	ANALYTICAL CHARACTERIZATION: ^{235}U Assay Analysis	ANALYTICAL CHARACTERIZATION: ^{235}U Mass Analysis	ANALYTICAL CHARACTERIZATION: Subcritical Mass Limits	ANALYTICAL CHARACTERIZATION: NDA Quantification Surveys	NCS CLASSIFICATION
Unique ID #: RFD 11CA71 Description: 17" BLANK FLANGE Independent Confirmations: Individual #1: _____ Date: _____ Individual #2: _____ Date: _____	Historical Documentation: _____ Process Knowledge: _____	Sample A: ____ % ^{235}U ____ 1 sigma (% ^{235}U) ____ 2 sigma (% ^{235}U) ____ Total (^{235}U + 2 sigma)	Sample A: ____ g ^{235}U Sample B: ____ g ^{235}U	____ kg^{235}U ____ Moderated Limits ____ Dry Limits	Sample A: Date & Time Performed: ___/___/___ ____ am/pm Date & Time Results Rec'd: ___/___/___ ____ am/pm Assumed Assay: ____ % ^{235}U Mass: ____ g ^{235}U Submitted By: _____ Date:	Initial: Reclassification: ✓ NCS-Exempt ____ Spacing-Controlled ____ Singularly-Contingent ____ DMSA/DRA Inspector: [illegible] Date: 2/10/01 NCS Engineer: _____ (If Spacing-Controlled or Singularly-Contingent item is involved) Date: _____ NDA Expert: _____ (If NDA is performed) Date: _____
Other Information: Bldg./Col.: C-331-T/K DMSA #: 331-C9 Origin: N/A	Visual Inspections Completed: ____ External Surfaces Inspection ____ Internal Surfaces Inspection Completed By: _____ Date: _____	Sample B: ____ % ^{235}U ____ 1 sigma (% ^{235}U) ____ 2 sigma (% ^{235}U) ____ Total (^{235}U + 2 sigma)			Sample B: Date & Time Performed: ___/___/___ ____ am/pm Date & Time Results Rec'd: ___/___/___ ____ am/pm Assumed Assay: ____ % ^{235}U Mass: ____ g ^{235}U Submitted By: _____ Date: _____	Independent Verifications: (BEFORE movement) Person #1: _____ Date: _____ Person #2: _____ Date: _____ Independent Verifications: (AFTER movement) Person #1: _____ Date: _____ Person #2: _____ Date: _____

Comments: NCS EXEMPT BY PREVIOUS CHARACTERIZATION (DMSA #331-C9-C23)
REFER TO ATTACHED SHEETS FOR DETAILED INFORMATION.

Approved to Relocate: To _____
Further NCS characterization is required. Item does not contain Singularly-Contingent mass.
NDA Expert #1: _____ Date: _____
NDA Expert #2: _____ Date: _____
DMSA/DRA Inspector: _____ Date: _____
NCS Engineer: _____ Date: _____

I have independently confirmed the **identification and description** for this NCS-Exempt or Spacing-Controlled Item against the written instructions and find this information to match.
Independent Person #1: _____
Date: _____
Independent Person #2: _____
Date: _____

I have independently confirmed the **destination** for this NCS-Exempt or Spacing-Controlled Item against the written instructions and find this information to match.
Independent Person #1: _____
Date: _____
Independent Person #2: _____
Date: _____

(PA-3003A - Rev. 4 - 07 2001)

Request For Disposal

Document ID Num.
110472

Generation Process Information (Completed by Generator)

W1. Generator's Name (Print)	W2. Badge No.	W3. Generator's Phone No.	W3. Mail Stop	W5. Charge No.
Terri Ross	31871	5325	C7431	

W6. Generator's Company	W7. Corp Owner	W8. Origin Site	W9. Origin Facility	W10. Origin Area	W11. Rad Area?
WESKEM	DOE	PGDP	C-331	C-331-09	☒ Yes ☐

W12. Number of Items	W13. Process Category (GCC)	W14. Process Activity Code	W15. AWA Number	W16. Physical For
1	LEG	A93	N/A	Solid

W17. Material Type(s)	W18. Holding Site	W19. Holding Facility	W20. Holding Area	W21 RFD Attachm
MT007	PGDP	C-331	C-331-09	☒ A ☐ B ☐

Waste Subcategories (Check all that apply)

	Yes	No		Yes	No		Yes	No		Yes	N
W22. Biological		✓	W25. Const. Debris		✓	W28. Non-Friable Asbestos		✓	W31. DMSA	✓	
W23. Accountable		✓	W26. Classified		✓	W29. TRU Waste		✓			
W24. Carcinogen		✓	W27. Friable Asbestos		✓	W30. CERCLA		✓			

Waste Description / Comments

W32.
DMSA 011082 2 zone + 2 EJT 8/29/01
C-310 Internal component (cone)
Old # 331-09-024

This is to certify that the above named material is properly described and in the stated container, which is in good condition, marke with the RFD number, content, appropriate generation date, source location, and at the stated location.

W33. Generation Plan No.	W34. Generator's Signature	Date
	Terri Ross	8/8/01

Handling / Pickup Information (Completed by Waste Management)

P1. Pick-up Site	P2. Pick-up Facility	P3. Pick-up Room/Area

P4. PPE Requirements

P6. Additional Handling Instructions
Verify labeling, barcode + verify zone

Reference FWR	
Origin Date	
PCB Start Date	

P7. Waste Coordinator (Issued By)	Badge	Date	P8. Disposal/Storage Completed By	Badge	Date
Terri Ross	31871	8/8/01	[illegible]	704287	8/10/01
Field Supervisor	**Badge**	**Date**	**P10. Data Processing Completed By**	**Badge**	**Date**
C M Taylor	13656	8/4/01	[illegible]		

P11. Waste Item Information

Waste Item No. 110472
Container No. (Barcode) DMSA 011082 2
Weight ~150#
Building and Grid 331-09 ZONE + 2 EJT 8/29/01
Container Size ~1.0 ft³

P12. Operator Comments
READER #12

PF-515a (03/01)

LOW-LEVEL RADIOACTIVE WASTE

DOCUMENT ID NUMBER: 110472

A1. PYROPHORIC MATERIALS -OTHER THAN RADIOACTIVE FORMS OF ISOTOPES ☐ YES ☑ NO	A2 ACTIVE CHELATING AGENTS ☐ YES ☑ NO	A3. TRU RADIOISOTOPES >100 nCi/g ☐ YES ☑ NO	A4 EXPLOSIVE MATERIALS ☐ YES ☑ NO	
A5. ETILOGICAL AGENTS ☐ YES	A6. IGNITION SOURCES ☐ YES ☑ NO	A7. FREE LIQUIDS (Unless Wastewater) ☐ YES ☑ NO	A8. RCRA WASTE ☐ YES ☑ NO	A9. TSCA WASTE ☐ YES ☑ NO

ADDITIONAL WASTE CHARACTERISTICS

A11. CHELATING AGENTS ☐ YES ☑ NO	A12. ION EXCHANGE RESINS ☐ YES ☑ NO	A13. DETECTABLE PCB (Concen. And Source <50 ppm) ☐ YES ☑ NO CONC. ppm	A14. WASTEWATER ☐ YES ☑ NO

RADIOISOTOPE DETERMINATION METHOD

DOCUMENT TYPE	DOCUMENT NUMBER
R1. ANALYSIS SAMPLE ID NO.	
R2. PROCESS KNOWLEDGE FORM NO.	210

R3. FISSILE CONTENT (Wt% U-235)	R4. GRAMS U-235	R5. NCS EXEMPT ☑ YES ☐ NO	R5. CHEMICAL FORM

DOCUMENT TYPE	DOCUMENT NUMBER
01. ANALYSIS SAMPLE ID NO.	

R8. TRANSFERABLE (Alpha) dpm/100cm2	R9. FIXED (Alpha) dpm/100cm2
dpm/100cm2	dpm/100cm2
R12. EXTERNAL DOSE/PACKAGE CONTACT MREM/HR	R13. DOSE RATE MREM/HR @ METERS (B/G)
R14. HP SIGNATURE	R15. SURVEY NUMBER

WASTE ITEM CONTAINER LOG

10. ITEM/CONTAINER		DOCUMENT ID NUMBER
1 OF 1		110472

11. WASTE ITEM ID NO	12. ORIGIN DATE	13. RCRA ACCUMULATION START DATE	14. PCB DATE TO STORAGE
110472-01	8/8/01	N/A	N/A

15. WASTE MATERIAL PLACED IN (Or Removed From) CONTAINER	16. QUANTITY	17. DEPOSITOR INITIAL	17. DEPOSITOR DATE	18. COMMENTS (If Waste is removed from container, then final disposition must be noted.)
C-310 INTERNAL COMPONENT CONE	1	JR	8/8/01	C 331-09-024 ZONE 2

19. CONTAINER ID NO (Barcode)	110. ABSORBENT MATERIALS?	QUANTITY	TYPE	111. NMC&A FORM	112. EST NET VOLUME	113. UNITS
DMSA 011 0822	☐ YES ☑ NO					

114. GROSS WEIGHT	115. UNITS	116. INNER CONTAINER TYPE	117. OUTER CONTAINER TYPE	118. TANK SEAL NUMBER

119. CONTAINER GENERATOR SIGNATORY	DATE
Dean Ross	8/8/01

UCN-20700 PAGE 2

DMSA/D&D NCS-Restricted Area Item - NCS Characterization Form

ITEM	INITIAL CHARACTERIZATION	ANALYTICAL CHARACTERIZATION				NCS CLASSIFICATION
		^{235}U Assay Analysis	^{235}U Mass Analysis	Subcritical Mass Limits	NDA Quantification Surveys	
Unique ID #: RFU1KF4KL Description: C-310 CONVERTER INTERNAL COMPONENT Independent Confirmations: Individual #1: [illegible] Date: 8/7/01 Individual #2: [illegible] Date: 8/10-01 • • • • • • • • • • • Other Information: Bldg./Col.: C-331-T/49-K DMSA #: 331-09 Origin N/A	Historical Documentation: _____ Process Knowledge: _____ Visual Inspections Completed: ____ External Surfaces Inspection ____ Internal Surfaces Inspection Completed By: _____ Date: _____	le A: ____ ____ 1 sigma (% ^{235}U) ____ 2 sigma (% ^{235}U) ____ Total (^{235}U + 2 sigma) Sample B: ____ % ^{235}U ____ 1 sigma (% ^{235}U) ____ 2 sigma (% ^{235}U) ____ Total (^{235}U + 2 sigma)	Sample A: ____ g ^{235}U Sample B: ____ g ^{235}U	____ kg ^{235}U ____ Moderated Limits ____ Dry Limits X	Sample A: Date & Time Performed: __/__/__ ____ am/pm Date & Time Results Rec'd: __/__/__ ____ am/pm Assumed Assay: ____ % ^{235}U Mass: ____ g ^{235}U Submitted By: _____ Date: _____ Sample B: Date & Time Performed: __/__/__ ____ am/pm Date & Time Results Rec'd: __/__/__ ____ am/pm Assumed Assay: ____ % ^{235}U Mass: ____ g ^{235}U Submitted By: _____ Date: _____	Initial: Reclassification: ✓ NCS-Exempt ____ ____ Spacing-Controlled ____ ____ Singularly-Contingent ____ DMSA/DRA Inspector: [illegible] Date: 8/10/01 NCS Engineer: _____ (If Spacing-Controlled or Singularly-Contingent item is involved) Date: _____ NDA Expert: _____ (if NDA is performed) Date: _____ Independent Verifications: (BEFORE movement) Person #1: _____ Date: _____ Person #2: _____ Date: _____ Independent Verifications: (AFTER movement) Person #1: _____ Date: _____ Person #2: _____ Date: _____

Comments: NCS EXEMPT BY PREVIOUS CHARACTERIZATION (DMSA# 331-09-024)
REFER TO ATTACHED SHEETS FOR DETAILED INFORMATION

Approved to Relocate: To _____
Further NCS characterization is required. Item does not contain Singularly-Contingent mass.
NDA Expert #1: _____ Date: _____
NDA Expert #2: _____ Date: _____
DMSA/DRA Inspector: _____ Date: _____
NCS Engineer: _____ Date: _____

I have independently confirmed the **identification and description** for this NCS-Exempt or Spacing-Controlled Item against the written instructions and find this information to match.

Independent Person #1: _____
Date: _____
Independent Person #2: _____
Date: _____

I have independently confirmed the **destination** for this NCS-Exempt or Spacing-Controlled Item against the written instructions and find this information to match.

Independent Person #1: _____
Date: _____
Independent Person #2: _____
Date: _____

(PA-3003A - Rev. 4 - 07/2001)

Document ID
11047

Request For Disposal

Generation Process Information (Completed by Generator)

W1 Generator's Name (Print)	W2 Badge No	W3 [redacted] Phone No	W3 Mail Stop	W5 Charge
Terri Ross	31871	5325	C793	

W6. Generator's Company	W7. Corp Owner	W8. Origin Site	W9. Origin Facility	W10 Origin Area	W11. Rad Are
WESKEM	DOE	PGDP	C-331	C-331-09	☐ Yes

W12. Number of Items	W13 Process Category (GCC)	W14. Process Activity Code	W15. AWA Number	W16. Physical
1	LEG	A93	N/A	Solid

W17. Material Type(s)	W18. Holding Site	W19. Holding Facility	W20. Holding Area	W21 RFD Atta
MT007	PGDP	C-331	C-33-09	☒ A ☐

Waste Subcategories (Check all that apply)

	Yes	No		Yes	No		Yes	No		Yes
W22. Biological		✓	W25. Const. Debris		✓	W28. Non-Friable Asbestos		✓	W31. DMSA	✓
W23. Accountable		✓	W26. Classified		✓	W29. TRU Waste		✓		
W24. Carcinogen		✓	W27. Friable Asbestos		✓	W30. CERCLA		✓		

Waste Description / Comments

W32. DMSA 0110823 zone + 2 EJS 8/29/01
C-310 internal component (cone)
old # 331-09-025

This is to certify that the above named material is properly described and in the stated container which is in good condition, ma with the RFD number, content, appropriate generation date, source location, and at the stated location.

W33. Generation Plan No.	W34. Generator's Signature	Date
	Terri Ross	8/8/01

Handling / Pickup Information (Completed by Waste Management)

P1. Pick-up Site	P2. Pick-up Facility	P3. Pick-up Room/Area

P4. PPE Requirements

P5. Container-Labeling Requirements

___ RCRA	___ PCB	___ DET PCB (<50ppm & source <50ppm)	___ RAD	___ DOE
___ FISSILE	___ NCS EXEMPT	___ RD CONFIDENTIAL	___ ACID	___ USEC
___ FLAMMABLE	___ COMBUSTIBLE	___ OXIDIZER	___ BASE	___ WESK
___ ASBESTOS	___ REACTIVE	___ TRANSURANIC	___ NON-HAZ	

6. Additional Handling Instructions
Verify labeling, barcode & verify zone

Reference FWR
Origin Date
PCB Start Date
RCRA Start Date

P7. Waste Coordinator (Issued B	Badge	Date	P8. Disposal/Storage Completed B	Badge	Date
Terri Ross	31871	8/8/0.	[illegible]	704287	8/10/

P9. Field Supervisor	Badge	Date	P1 Data Processing Completed By	Badge	Date
CM Taylor	13656	9/4/01	J. L. Weller	705451	9-4-01

P11. Waste Item Information

Waste Item No. 110473
Container No. (Barcode) DMSA 0110823
Weir ~ 150 LB
Loca and Grid 331-09 ZONE + 2 EJS 8/29/01
Container Size ~ 1 [redacted] 3

Reader *

3JCF-515a (03/01)

LOW-LEVEL RADIOACTIVE WASTE

ATTACHMENT A

DOCUMENT ID NUMBER 110473

-OTHER THAN RADIOACTIVE FORMS OF ISOTOP ☐ YES	☐ YES ☑ NO	☐ YES ☑ NO	☐ YES ☑ NO
A5. ETILOGICAL AGENTS ☐ YES ☑ NO	A6. IGNITION SOURCES ☐ YES ☑ NO	A7. FREE LIQUIDS (Unless Wastewater) ☐ YES ☑ NO	A8. RCRA WASTE ☐ YES ☑ NO / A9. TSCA WASTE ☐ YES ☑ NO

A10. WASTE VARIANCE REQUEST NUMBER(S)

☐ YES ☑ NO	☐ YES ☑ NO	☐ YES ☑ NO	ppm ☐ YES ☑ NO

DOCUMENT TYPE	DOCUMENT NUMBER
R1. ANALYSIS SAMPLE ID NO.	
R2. PROCESS KNOWLEDGE FORM NO.	210

R3. FISSILE CONTENT (Wt% U-235)	R4. GRAMS U-235	R5. NCS EXEMPT ☑ YES ☐ No	R5. CHEMICAL FORM

DOCUMENT TYPE	DOCUMENT NUMBER
01. ANALYSIS SAMPLE ID NO.	
02. PROCESS KNOWLEDGE FORM NO.	

☐ YES ☐ NO

R8. TRANSFERABLE (Alpha) dpm/100cm2	R9. FIXED (Alpha) dpm/100cm2
R10. TRANSFERABLE (Beta/Gamma) dpm/100cm2	R11. FIXED (Beta/Gamma) dpm/100cm2
R12. EXTERNAL DOSUPACKAGE CONTACT MREM/HR	R13. DOSE RATE MREM/HR @ METERS (B/G)
R14. HP SIGNATURE	R15. SURVEY NUMBER

WASTE ITEM CONTAINER LOG

10. ITEM/CONTAINER		DOCUMENT ID NUMBER
1 OF 1		110473

11 WASTE ITEM ID NO	12 ORIGIN DATE	13 RCRA ACCUMULATION START DATE	14 PCB DATE TO STORAGE
110473-01	8/8/01	N/A	N/A

15. WASTE MATERIAL PLACED IN (Or Removed From) CONTAINER	16. QUANTITY	17. DEPOSITOR INITIAL	17. DEPOSITOR DATE	18. COMMENTS (If Waste is removed from container, then final disposition must be noted.)
C-310 INTERNAL COMPONENT (CONE)	1	JR	08/8/01	C-331-09-025 ZONE 2

19 CONTAINER ID NO (Barcode)	110 ABSORBENT MATERIALS? YES / NO	QUANTITY	TYPE	111 NMC&A FORM	112 EST NET VOLUME	113 UNITS
MSA 0110823						

114 GROSS WEIGHT	115 UNITS	116 INNER CONTAINER TYPE	117 OUTER CONTAINER TYPE	118 TANK SEAL NUMBER

119 CONTAINER GENERATOR SIGNATURE: Sam Ross

DATE 8/8/01

UCN 20700 PAGE 2

DMSA/D&D NCS-Restricted Area Item - NCS Characterization Form

ITEM	INITIAL CHARACTERIZATION	ANALYTICAL CHARACTERIZATION				NCS CLASSIFICATION
		^{235}U Assay Analysis	^{235}U Mass Analysis	Subcriticat Mass Limits	NDA Quantification Surveys	
Unique ID #: RFD112473 Description: C-3.0 CONVERTER INTERNAL COMPONENT Independent Confirmations: Individual #1: [illegible] Date: 5/7/[illegible] Individual #2: [illegible] Date: [illegible] Other Information: Bldg./Col.: C-331-T9/C DMSA #: 331-09 Origin: N/A	Historical Documentation: ____ Process Knowledge: ____ Visual Inspections Completed: ____ External Surfaces Inspection ____ Internal Surfaces Inspection Completed By: ____ Date: ____	Sample A: ____ % ^{235}U ____ 1 sigma (% ^{235}U) ____ 2 sigma (% ^{235}U) ____ Total (^{235}U + 2 sigma) Sample B: ____ % ^{235}U ____ 1 sigma (% ^{235}U) ____ 2 sigma (% ^{235}U) ____ Total (^{235}U + [illegible]	Sample A: ____ g ^{235}U Sample B: ____ g ^{235}U	____ kg^{235}U ____ Moderated Limits ____ Dry Limits	Sample A: Date & Time Performed: __/__/__ ____ am/pm Date & Time Results Rec'd: __/__/__ ____ am/pm Assumed Assay: ____ % ^{235}U Mass: ____ g ^{235}U Submitted By: ____ Date: ____ Sample B: Date & Time Performed: __/__/__ ____ am/pm Date & Time Results Rec'd: __/__/__ ____ am/pm Assumed Assay: ____ % ^{235}U Mass: ____ g ^{235}U Submitted By: ____ Date: ____	Initial: Reclassification: ✓ NCS-Exempt ____ ____ Spacing-Controlled ____ ____ Singularly-Contingent ____ DMSA/DRA Inspector: [illegible] Date: 5/07/[illegible] NCS Engineer: ____ (If Spacing-Controlled or Singularly-Contingent item is involved) Date: ____ NDA Expert: ____ (if NDA is performed) Date: ____ Independent Verifications: (BEFORE movement) Person #1: ____ Date: ____ Person #2: ____ Date: ____ Independent Verifications: (AFTER movement) Person #1: ____ Date: ____ Person #2: ____ Date: ____

Comments: NCS EXEMPT BY PREVIOUS CHARACTERIZATION (DMSA # 331-09-025)
REFER TO ATTACHED SHEETS FOR DETAILED INFORMATION

Approved to Relocate: To ____
Further NCS characterization is required. Item does not contain Singularly-Contingent mass.
NDA Expert #1: ____ Date: ____
NDA Expert #2: ____ Date: ____
DMSA/DRA Inspector: ____ Date: ____
NCS Engineer: ____ Date: ____

I have independently confirmed the **identification and description** for this NCS-Exempt or Spacing-Controlled Item against the written instructions and find this information to match.
Independent Person #1: ____
Date: ____
Independent Person #2: ____
Date: ____

I have independently confirmed the **destination** for this NCS-Exempt or Spacing-Controlled Item against the written instructions and find this information to match.
Independent Person #1: ____
Date: ____
Independent Person #2: ____
Date: ____

(PA-3003A - Rev. 4 - 07/2001)

Request For Disposal

Document ID Nu
110474

Generation Process Information (Completed by Generator)

W1. Generator's Name (Print): Terri Ross	W2. Badge No.: 31871	W3. Generator's Phone No.: 5325	W3. Mail Stop: C7431	W5. Charge N
W6. Generator's Company: WESKEM	W7. Corp Owner: DOE	W8. Origin Site: PGDP	W9. Origin Facility: C-331	W10. Origin Area: C-331-09
W11. Rad Area: ☒ Yes	W12. Number of Items: 1	W13. Process Category (GCC): LEG	W14. Process Activity Code: A93	W15. AWA Number: N/A
W16. Physical: Solid	W17. Material Type(s): MT007	W18. Holding Site: PGDP	W19. Holding Facility: C-331	W20. Holding Area: C-331-09
W21 RFD Attac ☒ A ☐				

Waste Subcategories (Check all that apply)

	Yes	No		Yes	No		Yes	No		Yes
W22. Biological		✓	W25. Const. Debris		✓	W28. Non-Friable Asbestos		✓	W31. DMSA	✓
W23. Accountable		✓	W26. Classified		✓	W29. TRU Waste		✓		
W24. Carcinogen		✓	W27. Friable Asbestos		✓	W30. CERCLA		✓		

Waste Description / Comments

W32. DMSA 0110824 zone 1 + 2 EJJ 8/29/01
C-310 Internal component (core)
old # 331-09-026

This is to certify that the above named material is properly described and in the stated container, which is in good condition, mar with the RFD number, content, appropriate generation date, source location, and at the stated location.

W33. Generation Plan No.	W34. Generator's Signature: Terri Ross	Date: 8/8/01

Handling / Pickup Information (Completed by Waste Management)

P1. Pick-up Site	P2. Pick-up Facility	P3. Pick-up Room/Area

P4. PPE Requirements

P5. Container-Labeling Requirements

___ RCRA	___ PCB	___ DET PCB (<50ppm & source <50ppm)	___ RAD	___ DOE
___ FISSILE	___ NCS EXEMPT	___ RD CONFIDENTIAL	___ ACID	___ USEC
___ FLAMMABLE	___ COMBUSTIBLE	___ OXIDIZER	___ BASE	___ WESK
___ ASBESTOS	___ REACTIVE	___ TRANSURANIC	___ NON-HAZ	

P6. Additional Handling Instructions
Verify labeling,
Barcode,
Verify Zone

Reference FWR
Origin Date
PCB Start Date
RCRA Start Date

P7. Waste Coordinator (Issued By): Terri Ross	Badge: 31871	Date: 8/8/01	P8. Disposal/Storage Completed By: [illegible]	Badge: 204287	Date: 8/10/0
P9. Field Supervisor: CM Taylor	Badge: B656	Date: 9/4/01	P10. Data Processing Completed By: [illegible]	Badge: 705451	Date: 9-4-0

P11. Waste Item Information

Waste Item No. 110474
Container No. (Barcode) DMSA 0110824
Wei ~150 lb
oca... and Grid 331-09 zone 1 + 2 EJJ 8/29/01
Container Size ~1.0 ft3

P12. Operator Comments

Roaxa # 12

LOW-LEVEL RADIOACTIVE WASTE

ATTACHMENT A

DOCUMENT ID NUMBER: 110474

PROHIBITED ITEMS

A1 PYROPHORIC MATERIALS OTHER THAN RADIOACTIVE FORMS OF ISOTOPES ☐ YES ☑ NO	A2 ACTIVE CHELATING AGENTS ☐ YES ☑ NO	A3. TRU RADIOISOTOPES > 100 nCi/g ☐ YES ☑ NO	A4 EXPLOSIVE MATERIALS ☐ YES
A5. ETILOGICAL AGENTS ☐ YES ☑ NO	A6. IGNITION SOURCES ☐ YES ☑ NO	A7. FREE LIQUIDS (Unless Wastewater) ☐ YES ☑ NO	A8. RCRA WASTE ☐ YES ☑ NO A9. TSCA WASTE ☐ YES ☑ NO

A10. WASTE VARIANCE REQUEST NUMBER(S)

ADDITIONAL

A11. CHELATING AGENTS ☐ YES ☑ NO	A12. ION EXCHANGE RESINS ☐ YES ☑ NO	A13. DETECTABLE PCB (Concen. And Source <50 ppm) CONC. ☐ YES ☑ NO ppm	A14. WASTEWATER ☐ YES

DOCUMENT TYPE	DOCUMENT NUMBER
R1. ANALYSIS SAMPLE ID NO.	
R2. PROCESS KNOWLEDGE FORM NO.	210

R3. FISSILE CONTENT (Wt% U-235)	R4. GRAMS U-235	R5. NCS EXEMPT ☑ YES ☐ NO	R5. CHEMICAL FORM

DOCUMENT TYPE	DOCUMENT NUMBER
01. ANALYSIS SAMPLE ID NO.	
02. PROCESS KNOWLEDGE FORM NO.	

R8. TRANSFERABLE (Alpha) dpm/100cm2	R9. FIXED (Alpha) dpm/100cm2
R10. TRANSFERABLE (Beta/Gamma) dpm/100cm2	R11. FIXED (Beta/Gamma) dpm/100cm2
R12. EXTERNAL DOSE/PACKAGE CONTACT MREM/HR	R13. DOSE RATE MREM/HR @ METERS (B/G)
R14. HP SIGNATURE	R15. SURVEY NUMBER

WASTE ITEM CONTAINER LOG

I0. ITEM/CONTAINER		DOCUMENT ID NUMBER
1 OF 1		110474

I1 WASTE ITEM ID NO	I2 ORIGIN DATE	I3 RCRA ACCUMULATION START DATE	I4 PCB DATE TO STORAGE
110474-01	8/8/01	N/A	N/A

I5. WASTE MATERIAL PLACED IN (Or Removed From) CONTAINER	I6. QUANTITY	I7. DEPOSITOR INITIAL	I7. DEPOSITOR DATE	I8. COMMENTS (If Waste is removed from container, then final disposition must be noted.)
C-310 INTERNAL COMPONENT (CONE)	1	JR	8/8/01	C-331-09-024 ZONE 2

I9 CONTAINER ID NO (Barcode)	I10 ABSORBENT MATERIALS? YES NO	QUANTITY TYPE	I11 NMC&A FORM	I12 EST NET VOLUME	I13 UNITS
MSA 0110824					

I14 GROSS WEIGHT	I15 UNITS	I16 INNER CONTAINER TYPE	I17 OUTER CONTAINER TYPE	I18 TANK SEAL NUMBER

I9 CONTAINER GENERATOR SIGNATURE: Jean Ross

DATE: 8/8/01

UCN 20700 PAGE 2

DMSA/D&D NCS-Restricted Area Item - NCS Characterization Form

ITEM	INITIAL CHARACTERIZATION	ANALYTICAL CHARACTERIZATION: ^{235}U Assay Analysis	^{235}U Mass Analysis	Subcritical Mass Limits	NDA Quantification Surveys	NCS CLASSIFICATION
Unique ID #: RED 1KGTA Description: C-310 CONVERTER INTERNAL COMPONENT Independent Confirmations: Individual #1: [illegible] Date: [illegible] Individual #2: [illegible] Date: 8/10/01 **Other Information:** Bldg./Col.: C-331-T9/E DMSA #: 331-09 Origin: N/A	Historical Documentation: Process Knowledge: Visual Inspections Completed: ____ External Surfaces Inspection ____ Internal Surfaces Inspection Completed By: Date:	Sample A: ____ % ^{235}U ____ 1 sigma (% ^{235}U) ____ 2 sigma (% ^{235}U) ____ Total (^{235}U + 2 sigma) Sample B: ____ % ^{235}U ____ 1 sigma (% ^{235}U) ____ 2 sigma (% ^{235}U) ____ Total (^{235}U + 2 sigma)	Sample A: ____ g ^{235}U Sample B: ____ g ^{235}U	____ kg ^{235}U ____ ,Moderated Limits ____ Dry Limits X	Sample A: Date & Time Performed: __/__/__ ____ am/pm Date & Time Results Rec'd: __/__/__ ____ am/pm Assumed Assay: ____ % ^{235}U Mass: ____ g ^{235}U Submitted By: Date: Sample B: Date & Time Performed: __/__/__ ____ am/pm Date & Time Results Rec'd: __/__/__ ____ am/pm Assumed Assay: ____ % ^{235}U Mass: ____ g ^{235}U Submitted By: Date:	Initial: Reclassification: ✓ NCS-Exempt __ Spacing-Controlled __ Singularly-Contingent DMSA/DRA Inspector: [illegible] Date: [illegible] NCS Engineer: (If Spacing-Controlled or Singularly-Contingent item is involved) Date: NDA Expert: (if NDA's performed) Date: Independent Verifications: (BEFORE movement) Person #1: Date: Person #2: Date: Independent Verifications: (AFTER movement) Person #1: Date: Person #2: Date:

Comments: NCS EXCEMPT BY PREVIOUS CHARACTERIZATION (DMSA# 331-09-026)
REFER TO ATTACHED SHEETS FOR DETAILED INFORMATION

Approved to Relocate: To _____
Further NCS characterization is required. Item does not contain Singularly-Contingent mass.
NDA Expert #1: _____ Date: _____
NDA Expert #2: _____ Date: _____
DMSA/DRA Inspector: _____ Date: _____
NCS Engineer: _____ Date: _____

I have independently confirmed the **identification and description** for this NCS-Exempt or Spacing-Controlled Item against the written **instructions and find** this information to match.

Independent Person #1: _____
Date: _____

Independent Person #2: _____
Date: _____

I have independently confirmed the **destination** for this NCS-Exempt or Spacing-Controlled Item against the written instructions and find this information to match.

Independent Person #1: _____
Date: _____

Independent Person #2: _____
Date: _____

(PA-3003A - Rev. 4 - 07/2001)

Request For Disposal

Document ID No. 110475

Generation Process Information (Completed by Generator)

W1 Generator's Name (Print) Terri Ross	W2. Badge No 31871	W3 Generator's Phone No 5582	W3. Mail Stop C7431	W5 Charge No
W6 Generator's Company WESKEM	W7. Corp Owner DOE	W8. Origin Site PGDP	W9. Origin Facility C-331	W10. Origin Area C-331:09
W11 Rad Area? ☒ Yes				
W12. Number of Items 1	W13. Process Category (GCC) LEG	W14. Process Activity Code A93	W15. AWA Number N/A	W16. Physical F Solid
W17. Material Type(s) MT007	W18. Holding Site PGDP	W19. Holding Facility C-331	W20. Holding Area C-331·09	W21 RFD Attach ☒ A ☐ B

C-33

Waste Subcategories (Check all that apply)

	Yes	No		Yes	No		Yes	No		Yes
		✓	W25. Const. Debris		✓	W28. Non-Friable Asbestos		✓	W31. DMSA	✓
W23. Accountable		✓	W26. Classified		✓	W29. TRU Waste		✓		
W24. Carcinogen		✓	W27. Friable Asbestos		✓	W30. CERCLA		✓		

Waste Description / Comments

W32. DMSA0110825 zone +2 EJJ 8/29/01
C-310 Internal Component
old # 331-09-027

This is to certify that the above named material is properly described and in the stated container, which is in good condition, mar with the RFD number, content, appropriate generation date, source location, and at the stated location.

W33. Generation Plan No.	W34. Generator's Signature	Date
	Terri Ross	8/8/01

Handling / Pickup Information (Completed by Waste Management)

P1. Pick-up Site	P2. Pick-up Facility	P3. Pick-up Room/Area

P5. Container Labeling Requirements

___ RCRA FISSILE	___ PCB NCS EXEMPT	___ DET PCB (<50ppm & source <50ppm)	___ ACID	___ DOEC
		___ RD CONFIDENTIAL	___ BASE	
___ FLAMMABLE ASBESTOS	___ COMBUSTIBLE REACTIVE	___ OXIDIZER ___ TRANSURANIC	___ NON-H	___ WESKEM

P6. Additional Handling Instructions	
1 Verify labeling	Reference FWR
2 barcode	Origin Date
3 Verify zone	PCB Start Date
	RCRA Start Date

P7. Waste Coordinator (Issued By) Terri Ross	Badge 31871	Date 8/8/01	P8. Disposal/Storage Completed By	Badge 704287	Date 8/10/0
Field Supervisor C M Tufy	Badge 13656	Date 9/4/01	P10. Data Processing Completed By	Badge 705451	Date 5-4-0

P11. Waste Item Information — P12. Operator Comments

Waste Item No. 110475
Container No. (Barcode) DMSA0110825
Weight 150 LB
Location Grid 331-09 ZONE +2 EJJ 8/29/01
Container Size 1 Fr3

PECADER

CF-515a (03/01)

LOW-LEVEL RADIOACTIVE WASTE

ATTACHMENT A

DOCUMENT ID NUMBER 110475

PROHIBITED ITEMS

A1. PYROPHORIC MATERIALS -OTHER THAN RADIOACTIVE FORMS OF ISOTOPES	A2. ACTIVE CHELATING AGENTS	A3. TRU RADIOISOTOPES>100 nCi/g	A4. EXPLOSIVE MATERIALS
☐ YES ☑ NO	☐ YES ☑ NO	☐ YES ☑ NO	☐ YES ☑ NO

A5. ETILOGICAL AGENTS	A6. IGNITION SOURCES	A7. FREE LIQUIDS (Unless Wastewater)	A8. RCRA WASTE	A9. TSCA WASTE
☐ YES ☑ NO	☐ YES ☑ NO	☐ YES ☑ NO	☐ YES ☑ NO	☐ YES ☑ No

A10. WASTE VARIANCE REQUEST NUMBER(S)

ADDITIONAL WASTE CHARACTERISTICS

A11. CHELATING AGENTS	A12. ION EXCHANGE RESINS	A13. DETECTABLE PCB (Concen. And Source/<50 ppm)	A14. WASTEWATER
☐ YES ☑ NO	☐ YES ☑ NO	☐ YES ☑ NO CONC. ppm	☐ YES ☑ NO

DOCUMENT TYPE	DOCUMENT NUMBER
R1. ANALYSIS SAMPLE ID NO.	
R2. PROCESS KNOWLEDGE FORM NO.	210

R3. FISSILE CONTENT (Wt% U-235)	R4. GRAMS U-235	R5. NCS EXEMPT	R5. CHEMICAL FORM
		☑ YES ☐ NO	

OTHER SAMPLE ANALYSIS

DOCUMENT TYPE	DOCUMENT NUMBER
01. ANALYSIS SAMPLE ID NO.	
02. PROCESS KNOWLEDGE FORM NO.	

RADIATION DATA FROM HEALTH PHYSICS SURVEY SURFACE CONTAMINATION (Data Supplied by HP)

R7. HP SURVEY REQUIRED ☐ YES ☐ NO

R8. TRANSFERABLE (Alpha) dpm/100cm2	R9. FIXED (Alpha) dpm/100cm2
R10. TRANSFERABLE (Beta/Gamma) dpm/100cm2	R11. FIXED (Beta/Gamma) dpm/100cm2
R12. EXTERNAL DOSUPACKAGE CONTACT MREM/HR	R13. DOSE RATE MREM/HR @ METERS (B/G)
R14. HP SIGNATURE	R15. SURVEY NUMBER

WASTE ITEM CONTAINER LOG

10. ITEM/CONTAINER			DOCUMENT ID NUMBER
1 OF 1			110475
11 WASTE ITEM ID NO: 110475-01	12 ORIGIN DATE: 8/8/01	13 RCRA ACCUMULATION START DATE: N/A	14 PCB DATE TO STORAGE: N/A

15. WASTE MATERIAL PLACED IN (Or Removed From) CONTAINER	16. QUANTITY	17. DEPOSITOR INITIAL	17. DEPOSITOR DATE	18. COMMENTS (If Waste is removed from container, then final disposition must be noted.)
C-310 INTERNAL COMPONENT	1	JR	8/8/01	C-331-09-027 ZONE 2

19. CONTAINER ID NO (Barcode)	110. ABSORBENT MATERIALS?	QUANTITY	TYPE	111. NMC&A FORM	112. EST NET VOLUME	113. UNITS
DMSA 0110825	☐ YES ☑ NO					

114. GROSS WEIGHT	115. UNITS	116. INNER CONTAINER TYPE	117. OUTER CONTAINER TYPE	118. TANK SEAL NUMBER

119. CONTAINER OPERATOR SIGNATURE: Jerri Ross

DATE: 8/8/01

UCN 20700 PAGE 2

DMSA/D&D NCS-Restricted Area Item - NCS Characterization Form

ITEM	INITIAL CHARACTERIZATION	ANALYTICAL CHARACTERIZATION: ^{235}U Assay Analysis	ANALYTICAL CHARACTERIZATION: ^{235}U Mass Analysis	ANALYTICAL CHARACTERIZATION: Subcritical Mass Limits	ANALYTICAL CHARACTERIZATION: NDA Quantification Survey	NCS CLASSIFICATION
Unique ID #: RFO: KA75 Description: C-3.0 CONVERTER SUPERVISOR COMPONENT Independent Confirmations: Individual #1: [illegible] Date: ___ Individual #2: [illegible] Date: 2-10-01 Other Information: Bldg./Col.: C-331-TRK DMSA #: 331-09 Origin: N/A	Historical Documenration: ___ Process Knowledge: ___ Visual Inspections Completed: ___ External Surfaces Inspection ___ Internal Surfaces Inspection Completed By: ___ Date: ___	Sample A: ___ % ^{235}U ___ 1 sigma (% ^{235}U) ___ 2 sigma (% ^{235}U) ___ Total (^{235}U + 2 sigma) Sample B: ___ % ^{235}U ___ 1 sigma (% ^{235}U) ___ 2 sigma (% ^{235}U) ___ Total (^{235}U + 2 sigma)	Sample A: ___ g ^{235}U Sample B: ___ g ^{235}U	___ kg ^{235}U ___ Moderated Limits ___ Dry Limits	Sample A: Date & Time Performed: __/__/__ ___ am/pm Date & Time Results Rec'd: __/__/__ ___ am/pm Assumed Assay: ___ % ^{235}U Mass: ___ g ^{235}U Submitted By: ___ Date: ___ Sample B: Date & Time Performed: __/__/__ ___ am/pm Date & Time Results Rec'd: __/__/__ ___ am/pm Assumed Assay: ___ % ^{235}U Mass: ___ g ^{235}U Submitted By: ___ Date: ___	Initial: Reclassification: ✓ NCS-Exempt ___ Spacing-Controlled ___ Singularly-Contingent DMSA/DRA Inspector: [illegible] Date: 2/5/01 NCS Engineer: ___ (If Spacing-Controlled or Singularly-Contingent item is involved) Date: ___ NDA Expert: ___ (if NDA is performed) Date: ___ Independent Verifications: (BEFORE movement) Person #1: ___ Date: ___ Person #2: ___ Date: ___ Independent Verifications: (AFTER movement) Person #1: ___ Date: ___ Person #2: ___ Date: ___

Comments: NCS EXEMPT BY PREVIOUS CHARACTERIZATION (DMSA# 331-09-027) REFER TO ATTACHED SHEETS FOR DETAILED INFORMATION.

Approved to Relocate: To ___
Further NCS characterization is required. Item does not contain Singularly-Contingent mass.
NDA Expert #1: ___ Date: ___
NDA Expert #2: ___ Date: ___
DMSA/DRA Inspector: ___ Date: ___
NCS Engineer: ___ Date: ___

I have independently confirmed the identification and description for this NCS-Exempt or Spacing-Controlled Item against the written instructions and find this information to match.

Independent Person #1: ___
Date: ___

Independent Person #2: ___
Date: ___

I have independently confirmed the destination for this NCS-Exempt or Spacing-Controlled Item against the written instructions and find this information to match.

Independent Person #1: ___
Date: ___

Independent Person #2: ___
Date: ___

(PA-3003A - Rev. 4 - 07/2001)

DOE LLW RFD

Request For Disposal

Document ID Number 110476

W1. Generator's Name (Print)	W2. Badge No.	W3. Generator's Phone No.	W3. Mail Stop	W5. Charge No. / WO
EARL TYLER	31491	441-5235	C-743-T1	/

W6. Generator's Company	W7. Corp Owner	W8 Origin Site	W9. Origin Facility	W10. Origin Area	W11. Rad Area?
WESKEM	DOE	PGDP	C-331	C-331-09	☑ Yes ☐ No

W12. Number of Items	W13. Process Category (GCC)	W14. Process Activity Code	W15. AWA Number	W16. Physical Form
1	LEG	A93	N/A	SOLID

W17. Material Type(s)	W18. Holding Site	W19. Holding Facility	W20. Holding Area	W21 RFD Attachment
MT003, MT004, MT009	PGDP	C-331	C-331-09	☒ A ☐ B ☐ C

Waste Subcategories (Check all that apply)

	Yes	No		Yes	No		Yes	No		Yes	No
W22. Biological		✓	W25. Const. Debris		✓	W28. Non-Friable Asbestos		✓	W31. DMSA	✓	
W23. Accountable		✓	W26. Classified		✓	W29. TRU Waste		✓			
W24. Carcinogen		✓	W27. Friable Asbestos		✓	W30. CERCLA		✓			

Waste Description / Comments

W32. ST-90 CONTAINER SERIAL# 21-0522; FAN, EXTENSION CORD, LADDER, WELDING RODS and TARP. ZONE + 4

EJT 8/29/01

This is to certify that the above named material is properly described and in the stated container, which is in good condition, marked with the RFD number, content, appropriate generation date, source location, and at the stated location.

W33. Generation Plan No.	W34. Generator's Signature	Date
	E J Tyler	08-01-01

Handling / Pickup Information (Completed by Waste Management)

P1. Pick-up Site	P2. Pick-up Facility	P3. Pick-up Room/Area

4. PPE Requirements

P5. Container-Labeling Requirements

___ RCRA	___ PCB	___ DET PCB (<50ppm & source <50ppm)	___ RAD	___ DOE
___ FISSILE	___ NCS EXEMPT	___ RD CONFIDENTIAL	___ ACID	___ USEC
___ FLAMMABLE	___ COMBUSTIBLE	___ OXIDIZER	___ BASE	___ WESKEM
___ ASBESTOS	___ REACTIVE	___ TRANSURANIC	___ NON-HAZ	

J. Additional Handling Instructions

Verify labeling, barcode and zone locations.

Reference FWR

Origin Date

PCB Start Date

RCRA Start Date

Waste Coordinator (Issued By)	Badge	Date	P8. Disposal/Storage Completed By	Badge	Date
E J Tyler	31491	8/23/01	TMOTW	31040	8/28/01

P9. Field Supervisor	Badge	Date	P10. Data Processing Completed By	Badge	Date
CR Taylor	13656	8/28/01	Cliff Walker	105451	8-28-01

P11. Waste Item Information

Waste Item No. 110476-01

Container No. (Barcode) DMSA0100125

Weight EST. 1500 lbs

Location and Grid 331-09 ZONE 4

Container Size 128 CU. FT

P12. Operator Comments

DOE-515a (03/01)

DMSA

LOW-LEVEL RADIOACTIVE WASTE

ATTACHMENT A

DOCUMENTIDNUMBER 110476

IBITED ITEMS

A1. PYROPHORIC MATERIALS -OTHER THAN RADIOACTIVE FORMS OF ISOTOPES	A2. ACTIVE CHELATING AGENTS	A3. TRU RADIOISOTOPES >100 nCi/g	A4. EXPLOSIVE MATERIALS
☐ YES ☑ NO	☐ YES ☑ NO	☐ YES ☑ NO	☐ YES ☑ NO

A5. ETILOGICAL AGENTS	A6. IGNITION SOURCES	A7. FREE LIQUIDS (Unless Wastewater)	A8. RCRA WASTE	A9. TSCA WASTE
☐ YES ☑ NO	☐ YES ☑ NO	☐ YES ☑ NO	☐ YES ☑ NO	☐ YES ☑ NO

A10. WASTE VARIANCE REQUEST NUMBER(S)

ADDITIONAL WASTE CHARACTERISTICS

A11. CHELATING AGENTS	A12. ION EXCHANGE RESINS	A13. DETECTABLE PCB (Concen. And Source <50 ppm)	A14. WASTEWATER
☐ YES ☑ NO	☐ YES ☑ NO	☐ YES ☑ NO CONC. ppm	☐ YES ☑ NO

RADIOISOTOPE DETERMINATION METHOD

DOCUMENT TYPE	DOCUMENT NUMBER
R1. ANALYSIS SAMPLE ID NO.	
R2. PROCESS KNOWLEDGE FORM NO.	210

R3. FISSILE CONTENT (Wt% U-235)	R4. GRAMS U-235	R5. NCS EXEMPT	R5. CHEMICAL FORM
		☑ YES ☐ NO	

DOCUMENT TYPE	DOCUMENT NUMBER
O1. ANALYSIS SAMPLE ID NO.	
02. PROCESS KNOWLEDGE FORM NO.	

R8. TRANSFERABLE (Alpha) dpm/100cm2	R9. FIXED (Alpha) dpm/100cm2
R10. TRANSFERABLE (Beta/Gamma) dpm/100cm2	R11. FIXED (Beta/Gamma) dpm/100cm2
R12. EXTERNAL DOSUPACKAGE CONTACT MREM/HR	R13. DOSE RATE MREM/HR @ METERS (B/G)
R14. HP SIGNATURE	R15. SURVEY NUMBER

WASTE ITEM CONTAINER LOG

I0. ITEM/CONTAINER	DOCUMENT ID NUMBER
EJT 8/3/01 ~~110476~~ 1 OF 1	110476-01

I1. WASTE ITEM ID NO.	I2. ORIGIN DATE	I3. RCRA ACCUMULATION START DATE	I4. PCB DATE TO STORAGE
110476-01	8/01/01	N/A	N/A

I5. WASTE MATERIAL PLACED IN (Or Removed From) CONTAINER	I6. QUANTITY	I7. DEPOSITOR INITIAL	I7. DEPOSITOR DATE	I8. COMMENTS (If Waste is removed from container, then final disposition must be noted.)
FAN	1	EJT	8/01/01	from DMSA C-331-09
EXTENSION CORD	1	EJT	8/01/01	ZONE 4
LADDER	1	EJT	8/01/01	
WELDING RODS	1	EJT	8/01/01	
TARP	2	EJT	8/01/01	
Masslinn mops JE 8/9/01	1	TR	8/9/01	

I9 CONTAINER ID NO (Barcode)	I10 ABSORBENT MATERIALS?	QUANTITY	TYPE	I11 NMC&A FORM	I12 EST NET VOLUME	I13 UNITS
DMSA0100125	☐ YES ☑ NO				128 cu.ft.	

I14 GROSS WEIGHT	I15 UNITS	I16 INNER CONTAINER TYPE	I17 OUTER CONTAINER TYPE	I18. TANK SEAL NUMBER
Est. 1500 lbs				N/A

I19. CONTAINER GENERATOR SIGNATURE	DATE
E. J. Tyler	08/03/01

UCN-20700 PAGE 2

Section 8.

REUSABLE MATERIALS – E FORMS

WESKEM DMSA ITEM IDENTIFICATION SHEET

Prefix: E0000

DMSA Item ID #: 1

DMSA # *: C-331-09

Zone # *: 1

Description *: 1100" converter R114 cooler

CATEGORY

Reusable Equipment: ☐

New or Unused Items: ☒

USEC Use: ☐

Number of Items: 1

Estimated Volume: 115 ft3

Estimated Weight: ~7400 lb

Barcode # *: DMSA 0110818

Ord Used # *: C-331-09-020

Verifier # 1 *: Paul Almon

Badge # 1 *: 704290

Date # 1 *: 8/9/01

Verifier # 2 *: [illegible]

Badge # 2 *: 61871

Date # 2 *: 09AUG01

ATTACHMENTS

NCS Characterization Form: ☐

HP Survey: ☐

Analytical Data: ☐

Comments: Entered into BC. reader 8/14/01 JR

DMSA/D&D NCS-Restricted Area Item - NCS Characterization Form

DMSA/D&D NCS-Restricted Area Item - NCS Characterization Form

Unique ID #: KCCCC01

Description: "DO" CONVERTER COOLER

Independent Confirmations:
Individual #1: [illegible]
Date: 5/7/01
Individual #2: [illegible]
Date: 5/7/01

* * * * * * * * * * *

Other Information:
Bldg./Col. C-331-SK

Origin: N/A

Historical Documentation:

Process Knowledge:

Visual Inspections Completed:
External Surfaces Inspection
Internal Surfaces Inspection

Completed By:

Date:

ANALYTICAL CHARACTERIZATION

^{235}U Assay Analysis	^{235}U Mass Analysis	Subcritical Mass Limits	NDA Quantification Surveys	NCS CLASSIFICATION
Sample A: % ^{235}U 1 sigma (% ^{235}U) 2 sigma (% ^{235}U) Total (^{235}U 2 sigma) **Sample B:** % ^{235}U 1 sigma (% ^{235}U) 2 sigma (% ^{235}U) Total (^{235}U + 2 sigma)	**Sample A:** g ^{235}U **Sample B:** g ^{235}U	kg ^{235}U Moderated Limits Dry Limits	**Sample A:** Date & Time Performed: __/__/__ ___am/pm Date & Time Results Rec'd: __/__/__ ___am/pm Assumed Assay: ___ % ^{235}U Mass: ___ g ^{235}U Submitted By: Date: **Sample B:** Date & Time Performed: __/__/__ ___am/pm Date & Time Results Rec'd: __/__/__ ___am/pm Assumed Assay: ___ % ^{235}U Mass: ___ g ^{235}U Submitted By: Date:	Initial: Reclassification: ✓ NCS-Exempt Spacing-Controlled Singularly-Contingent DMSA/DRA Inspector: [illegible] Date: 5/7/01 NCS Engineer: (If Spacing-Controlled or Singularly-Contingent item is involved) Date: NDA Expert: (if NDA is performed) Date: **Independent Verifications:** **(BEFORE movement)** Person #1: Date: Person #2: Date: **Independent Verifications:** **(AFTER movement)** Person #1: Date: Date: Person #2: Date:

[illegible] PREVIOUS CHARACTERIZATION (DMSA# 331-09-020)
REFER TO ATTACHED SHEETS FOR DETAILED INFORMATION

Approved to Relocate: To
Further NCS characterization is required. Item does not contain Singularly-Contingent mass
NDA Expert #1: Date:
NDA Expert #2: Date:

DMSA/DRA Inspector Date:
NCS Engineer: Date:

I have independently confirmed the **identification and description** for this NCS-Exempt or Spacing-Controlled Item against the written instructions and find this information to match.

Independent Person #1:
Date:

Independent Person #2:
Date:

I have independently confirmed the **destination** for this NCS-Exempt or Spacing-Controlled Item against the written instructions and find this information to match.

Independent Person #1:
Date:

Independent Person #2:
Date:

WESKEM DMSA ITEM **IDENTIFICATION SHEET**

Prefix	DMSA Item ID #
E000	81

DMSA #: 331-09

Zone #: 1

Description:

MISCELLANEOUS EQUIPMENT, GRINDER ETC.

JL 10-25-01 Consisted of: (1) bottle sprayer, (1) welding mask, (2) grinders, (1) fire extinguisher, (1) bucket of assorted tools, (1) safety belt, (1) charging cord

CATEGORY:

- [x] Reusable Equipment
- [ ] New or Unused Items
- [ ] USEC List

Number of Items: 8 JL 10-25-01

Estimated Volume: .5 ft3 10/15/01

Estimated Weight: 40 lbs. 10/15/01

Barcode #: DMSA0100146 JL 10-25-01

Old Usec #:

Verifier #1: E J Taylor

Badge #1: 31491

Date #1: 8/24/01

Verifier #2: C M Taylor

Badge #2: 136SE

Date #2: 8/24/01

ATTACHMENTS:

- [x] NCS Characterization Form
- [ ] HP Survey
- [ ] Analytical Data

Comments:

No Previous DMSA No. ~~ITEMS~~ ITEMS TRANSFERRED to C-752-A.

EJT 8/23/01

COPY

DMSA/D&D NCS-Restricted **Area** Item - NCS Characterization Form

ITEM	INITIAL CHARACTERIZATION	ANALYTICAL CHARACTERIZATION: ^{235}U Assay Analysis	ANALYTICAL CHARACTERIZATION: ^{235}U Mass Analysis	ANALYTICAL CHARACTERIZATION: Subcritical Mass Limits	ANALYTICAL CHARACTERIZATION: NDA Quantification Surveys	NCS CLASSIFICATION
Unique ID #: E-000821 Description: MISCELLANEOUS EQUIPMENT, GRINDERS ETC. Independent Confirmations: Individual #1: [illegible] Date: 8/24/01 Individual #2: CM Taylor Date: 8/24/01 Other Information: Bldg./Col.: C-752A DMSA #: N/A Origin: DMSA-C-331-09	Historical Documentation: ____ Process Knowledge: ____ Visual Inspections Completed: ____ External Surfaces Inspection ____ Internal Surfaces Inspection Completed By: ____ Date: ____ NA	Sample A: ____ % ^{235}U ____ 1 sigma (% ^{235}U) ____ 2 sigma (% ^{235}U) ____ Total (^{235}U + 2 sigma) Sample B: ____ % ^{235}U ____ 1 sigma (% ^{235}U) ____ 2 sigma (% ^{235}U) ____ Total (^{235}U + 2 sigma)	Sample A: ____ g ^{235}U Sample B: ____ g ^{235}U	____ kg ^{235}U ____ Moderated Limits ____ Dry Limits X NA	Sample A: Date & Time Performed: __/__/__ ____ am/pm Date & Time Results Rec'd: __/__/__ ____ am/pm Assumed Assay: ____ % ^{235}U Mass: ____ g ^{235}U Submitted By: ____ Date: ____ Sample B: Date & Time Performed: __/__/__ ____ am/pm Date & Time Results Rec'd: __/__/__ ____ am/pm Assumed Assay: ____ % ^{235}U Mass: ____ g ^{235}U Submitted By: ____ Date: ____	Initial: Reclassification: ____ NCS-Exempt ____ Spacing-Controlled ____ Singularly-Contingent DMSA/DRA Inspector: ____ Date: ____ NCS Engineer: ____ (If Spacing-Controlled or Singularly-Contingent item is involved) Date: ____ NDA Expert: ____ (if NDA is performed) Date: ____ Independent Verifications: (BEFORE movement) Person #1: ____ Date: ____ Person #2: ____ Date: ____ Independent Verifications: (AFTER movement) Person #1: ____ Date: ____ Person #2: NA Date: ____

Comments: NCS EXEMPT BY PREVIOUS CHARACTERIZATION (FWR #5978-02)
REFER TO ATTACHED SHEETS FOR DETAILED INFORMATION

Approved to Relocate: To ____
Further NCS characterization is required. Item does not contain Singularly-Contingent mass.
NDA Expert #1: ____ Date: ____
NDA Expert #2: ____ Date: ____
DMSA/DRA Inspector: ____ Date: ____
NCS Engineer: ____ Date: ____
NA

I have independently confirmed the identification and description for this NCS-Exempt or Spacing-Controlled item against the written instructions and find this information to match.

Independent Person #1: ____
Date: ____

Independent Person #2: ____
Date: ____

I have independently confirmed the destination for this NCS-Exempt or Spacing-Controlled item against the written instructions and find this information to match.

Independent Person #1: ____
Date: ____

Independent Person #2: ____
Date: ____

(PA-3003A - Rev. 4 - 07/2001)

WESKEM DMSA ITEM IDENTIFICATION SHEET

Prefix: E000

DMSA Item ID #: 82

DMSA #: 331-09

Zone #: 1

Description:

JLG SCISSOR-LIFT

CATEGORY:

Reusable Equipment: ✓

New or Unused Items: ☐ EJ Taylor 10/15/01

USEC List: ☐ EJ Taylor 10/15/01

Number of Items: 1

Estimated Volume: 360 ft^3

Estimated Weight: 3000 lbs.

Barcode #: JL 10-25-01 DMSA 0100147

Old Usec #:

Verifier #1: EJ Taylor

Badge #1: 31491

Date #1: 8/24/01

Verifier #2: CM Taylor

Badge #2: 13656

Date #2: 8/24/01

ATTACHMENTS:

NCS Characterization Form: ✓

HP Survey: ☐

Analytical Data: ☐

Comments:

No previous DMSA No. Item TRANSFERRED TO C-752-A.

COPY

DMSA/D&D NCS-Restricted **Area** Item - NCS Characterization Form

ITEM	INITIAL CHARACTERIZATION	ANALYTICAL CHARACTERIZATION: ^{235}U Assay Analysis	^{235}U Mass Analysis	Subcritical Mass Limits	NDA Quantification Surveys	NCS CLASSIFICATION
Unique ID: & — a — Description: XLG SCISSOR LIFT Independent Confirmations: Individual #1: [signature] Date: 8/24/01 Individual #2: [signature] Date: 8/24/01 Other Information: Bldg./Col.: C-752A DMSA #: N/A Origin: DMSA-331-09	Historical Documentation: Process Knowledge: Visual Inspections Completed: ____ External Surfaces Inspection ____ Internal Surfaces Inspection Completed By: Date: NA	Sample A: ____ % ^{235}U ____ 1 sigma (% ^{235}U) ____ 2 sigma (% ^{235}U) ____ Total (^{235}U + 2 sigma) Sample B: ____ % ^{235}U ____ 1 sigma (% ^{235}U) ____ 2 sigma (% ^{235}U) ____ Total (^{235}U + 2 sigma)	Sample A: ____ g ^{235}U Sample B: ____ g ^{235}U	____ kg ^{235}U ____ Moderated Limits ____ Dry Limits NA	Sample A: Date & Time Performed: __/__/__ ____ am/pm Date & Time Results Rec'd: __/__/__ ____ am/pm Assumed Assay: ____ % ^{235}U Mass: ____ g ^{235}U Submitted By: Date: Sample B: Date & Time Performed: __/__/__ ____ am/pm Date & Time Results Rec'd: __/__/__ ____ am/pm Assumed Assay: ____ % ^{235}U Mass: ____ g ^{235}U Submitted By: Date:	Initial: ✓ Reclassification: ____ NCS-Exempt ____ Spacing-Controlled ____ Singularly-Contingent DMSA/DRA Inspector: [signature] Date: NCS Engineer: (If Spacing-Controlled or Singularly-Contingent item is involved) Date: NDA Expert: (if NDA is performed) Date: Independent Verifications: (BEFORE movement) Person #1: Date: Person #2: Date: Independent Verifications: (AFTER movement) Person #1: Date: Person #2: N/A Date:

Comments: NCS EXEMPT BY PREVIOUS CHARACTERIZATION (FWR #5978-01)
REFER TO ATTACHED SHEETS FOR DETAILED INFORMATION

Approved to Relocate: To ____ Further NCS characterization is required. Item does not contain Singularly-Contingent mass. NDA Expert #1: ____ Date: ____ NDA Expert #2: ____ Date: ____ DMSA/DRA Inspector: ____ Date: ____ NCS Engineer: ____ Date: ____ NA	I have independently confirmed the **Identification and description** for this NCS-Exempt or Spacing-Controlled Item against the written instructions and **find** this information to match. Independent Person #1: ____ Date: ____ Independent Person #2: ____ Date: ____	I have independently confirmed the destination for the Spacing-Controlled Item against the written instructions information to match. Independent Person #1: ____ Date: ____ Independent Person #2: ____ Date: ____

(PA-3003A - Rev. 4 - 07/2001)

Section 9.

SME INSPECTION

SAMPLING STRATEGY (C-331-09) 9-06-01

RFD NUMBER	DMSA	CONTENTS	FROM ZONE	TO ZONE	RCRA CHAR	RCRA METAL	RCRA VOA	RCRA SVOA	PCB	ASB	WIPE	LIQUID	SOLID	SLUDGE	NO SAMPLING REQUIRED	NCS CONTROLLED	Comments
110451	331-09-001	C-310 CONVERTER, C-8254	2	2											X		
110452	331-09-004	C-310 CONVERTER, C-8257	6	6											X		
110453	331-09-005	C-310 CONVERTER, C-8255	6	6											X		
110454	331-09-006	C-310 CONVERTER, C-47452	6	6											X		
110455	331-09-007	C-310 CONVERTER, C-8258	6	6											X		
110456	331-09-008	C-310 CONVERTER, C-8235	4	4											X		
110457	331-09-009	C-310 CONVERTER, C-47450	4	4											X		
110458	331-09-010	C-310 CONVERTER, C-47451	4	4											X		
110459	331-09-011	C-310 CONVERTER, C-47449	2	2											X		
110460	331-09-012	C-310 CONVERTER, C-46440	2	2											X		
110461	331-09-013	C-310 CONVERTER, INTERNAL CONE PLATE	2	2											X		
110462	331-09-014	CONVERTER SADDLES	2	2											X		
110463	331-09-015	CONVERTER SADDLES	2	2											X		
110464	331-09-016	CONVERTER SADDLES	2	2											X		
110465	331-09-017	17" BLANK FLANGE	2	2											X		
110466	331-09-018	20" BLANK FLANGE	2	2											X		
110467	331-09-019	4" BLANK FLANGE	2	2											X		
110469	331-09-021	1" DIAMETER CHOKER, 8' LONG	2	2											X		
110470	331-09-022	17" BLANK FLANGE	2	2											X		
110471	331-09-023	17" BLANK FLANGE	2	2											X		
110472	331-09-024	C-310 INTERNAL CONE COMPONENT	2	2											X		
110473	331-09-025	C-310 INTERNAL CONE COMPONENT	2	2											X		
110474	331-09-026	C-310 INTERNAL CONE COMPONENT	2	2											X		
110475	331-09-027	C-310 INTERNAL CONE COMPONENT	2	2											X		
110319	331-09-028	C-310 INTERNAL CONE COMPONENT	2	2											X		
110320	331-09-029	21" BLANK FLANGE	4	4											X		
110476	NO NUMBER ASSIGNED	ST-90 Container w/fan, extension cord, ladder, welding rods, and tarp.	4	4													

E-NUMBER	DMSA	CONTENTS	FROM ZONE	TO ZONE	RCRA CHAR	RCRA METAL	RCRA VOA	RCRA SVOA	PCB	ASB	WIPE	LIQUID	SOLID	SLUDGE	NO SAMPLING REQUIRED	NCS CONTROLLED	Comments
E00001	C-331-09-020	"00" Converter R114 Cooler	1	1											X		
E00081	NO NUMBER ASSIGNED	MISCELLANEOUS EQUIPMENT; GRINDER, ETC.	1	C-752-A											X		
E00082	NO NUMBER ASSIGNED	JLG SCISSOR LIFT	1	C-752-A											X		

Section 10.

HP SURVEY

Radiological Survey Form

Survey No.: 01-ER-495-5 Date: 7/20/01 Time: 1730 RWPNO: 01-008-~~48~~-5

Location of Survey – General (Site/Bldg.)/Specific (Room/Area): C331 DMSA 331-09

Purpose of Survey: Characterization Material Description: N/A

Technician: Matt Klein / Matt Klein Badge: 60737 Technician: N/A Badge: N/A

Model #: Serial #: Cal. due date: Probe Model #: CF Pl.: CF Plane:

Model #: Serial #: Cal. due date: Probe Model #: CF Pl.: CF Plane:

Model #: Serial #: Cal. due date: N Probe Model #: CF Pl.: CF Plane:

Model #: Serial #: Cal. due date: Probe Model #: CF Pl.: CF Plane:

Model #: Serial #: Cal. due date: A α CF: N/A βγ CF: N/A

Model #: Serial #: Cal. due date: α CF: N/A βγ CF: N/A

Tennelec: Yes ✓ No ____ (If yes, see attached results)

COPY

Smear or Item No.	Sample Location	BKGD α	Removable α dpm/100cm²	BKGD α	Total α dpm/100cm²	BKGD βγ	Removable β,γ dpm/100cm²	BKGD βγ	Total β,γ dpm/100cm²	Remarks
		L		L		L		L		
1-20	on floor	* *	*		N A	*			N A	* see results on attached sheets. This is the 1st entry into this DMSA.
					N A					N A

COMMENTS: Boundary Verification

Released to: NA

HP Supervisor Review: 8-7-2001
Signature/ Date

RADIOLOGICAL SURVEY MAP FORM

SEC RAOCON

SURVEY MAP	SURVEY NO.: 01 - ER - 995 - S

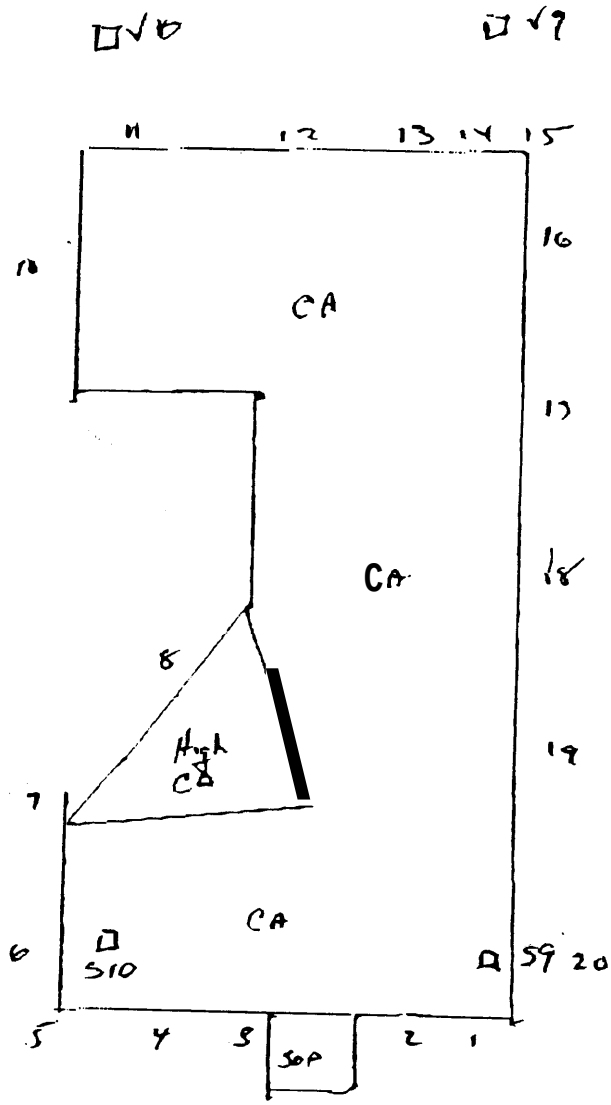

Copy

Aug-15-01 11:55A SafetyBEcology Corp 502 441 5182 p.09

SEC RadCon Alliance - Paducah 12:01:39P

Smear and Air Sample Activity Report

7/25/01

Survey Number OHR-9955

Calibrated to 12-21-01

Batch ID:	1 Minute Smear - 200107250955	**Acquisition Date:**	7/25/01
Group ID:	C **Device Serial Number:** 68676	**Acquisition Time: (minutes)**	1.0
Device Name:	Tennelec Series 2		
Selected Geometry:	Swipe/Smear	**Operating Voltage: (volts)**	1,485.0

Efficiency Factors			Daily 30 Minute Background CPM		Batch Critical Level DPM	
Alpha Efficiency -	0.23	± 0.00	Alpha Background (CPM) -	0.23	Alpha Lc -	3.57
Beta Efficiency -	0.29	± 0.01	Beta Background (CPM) -	0.67	Beta Lc -	4.78

Sample ID		Quantity	Alpha DPM (DPM)	2σ	Alpha MDA (DPM)	Beta DPM (DPM)	2σ	Beta MDA (DPM)
20010725095510-C21		0.00	-1.03	0.78	19.11	57.23	28.98	19.05
2001072s113555-C22	2	0.00	-1.03	0.78	19.11	32.70	22.21	19.05
20010725113715-C23	3	0.00	-1.03	0.78	19.11	25.69	19.87	19.05
20010725113835-C24	4	0.00	-1.03	0.78	19.11	15.18	15.71	19.05
2.00107251 14125-C26	6	0.00	-1.03	0.78	19.11	64.23	30.65	19.05
0010725114245-C27	7	0.00	7.81	12.53	19.11	78.25	33.74	19.05
20010725114405-C28	8	0.00	-1.03	0.78	19.11	15.18	15.71	19.05
0010725114525-C29	9	0.00	7.81	12.53	19.11	36.20	23.30	19.05
0010725114646-C30	10	0.00	7.81	12.53	19.11	36.20	23.30	19.05
0010725114806-C31	11	0.00	-1.03	0.76	19.11	15.18	15.71	19.05
0010725114926-C32	12	0.00	3.39	8.88	19.11	32.70	22.21	19.05
00107251 15046-C33	13	0.00	-1.03	0.78	19.11	4.67	0.97	19.05
10107251 15206-C34	14	0.00	-1.03	0.78	19.11	37.23	28.98	19.05
20010725115336-C35	15	0.00	3.39	8.88	19.11	32.70	22.21	19.05
010725115736-C38	18	0.00	-1.03	0.78	19.11	50.22	27.22	19.05
20010725115856-C39	19	0.00	-1.03	0.78	19.11	22.19	18.59	19.05
010725120016-C40	20	0.00	3-39	8.88	19.11	25.69	19.87	19.05

COPY

unt Room Review: Sampling Tech Review:

Radiological Survey Form

Survey No.: 01-ER-1059-S

Date: 7-30-01 Time: 1715

Page 1 of 7

Location of Survey – General (Site/Bldg.)/Specific (Room/Area): C-331 - DMSA-09

RWP NO: 01-DOE-48-S

Purpose of Survey: Gamma scan and boundary verification

Technician: M. Garcia / M. Garcia Badge: 705008 Material Description: NA

Technician: John Gau / John Gau Badge: 635941

Model #	Serial #	Cal. due date	Probe Model #	CF Pt.	CF Plane
Ludlum 12	168820	3-20-02	44-9	4.78	30.82
Ludlum 2220	22860	8-24-01	43-5	7.65	15.29
/	/	/	/	/	/
/	/	/	/	/	/
N/A	N/A	N/A	N/A	N/A	N/A
/	/	/	/	/	/

Tennelec: Yes X No ____ (If yes, see attached results)

α CF : ____ β/γ CF : ____

α CF : ____ β/γ CF : ____

Smear or Item No.	Sample Location	BKGD α	Removable α dpm/100cm²	BKGD α	Total α dpm/100cm²	BKGD β/γ	Removable β,γ dpm/100cm²	BKGD β/γ	Total β,γ dpm/100cm²	Remarks
1	floor	*	*			*	*			
2	cooler									
3	↓									
4	converter									
5	↓				N/A					
6	↓								N/A	
7	↓									N/A
8	beams									
9	converter									
10	↓									

COMMENTS: * See Tennelec pages attached. Areas #31 + 32 were field counted results on pg 2.

COPY

Released to: NA

PAD/RCO-081 (Page 1 of 3) Rev. 1 (2/01)

HP Supervisor Review: [signature] / 8-2-2001

Signature/ Date

Radiological Survey Continuation Form

Survey No.: 01-ER-1059-S

Item No.	Sample Location	BKGD L_c	Removable α dpm/100cm²	BKGD L_c	Total α dpm/100cm²	BKGD L_c	Removable β,γ dpm/100cm²	BKGD L_c	Total β,γ dpm/100cm²	Remarks
11-16	converter	* *	*			* *	*			
17	floor									
18	converter									
19	floor									
21-22	converter									
23	converter									
24	floor				N/A				N/A	N/A
25-28	converter									
29	floor									
30	converter									
31	cooler in HCA	1 17.81	38.25			50 78.72	41,695			
32	cooler in HCA		15.30				11,233			
33-42	floor boundary verification	* *	*			* *	*			
					N/A					

COMMENTS/NOTES:

* See Tennelec page attached

N/A

COPY

Safety&Ecology Corp 501 441 5182 P.12

RADIOLOGICAL SURVEY MAP FORM

C331-09 DMSA

SEC RADCON

SURVEY MAP	SURVEY NO.: 01 - ER - 1059 - S

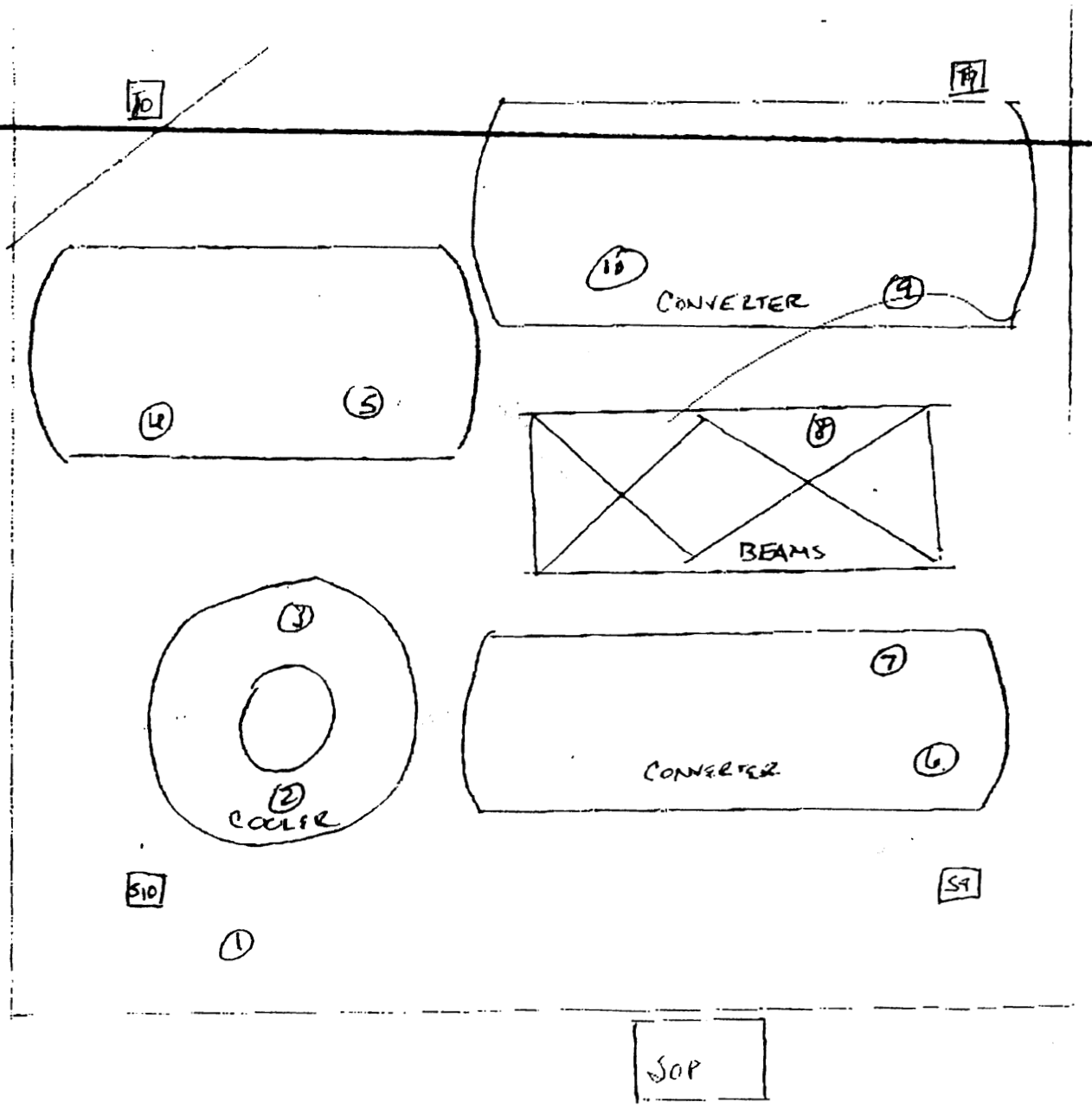

PAD/RCO-081 (Page 3 of 3) Rev.1 (2/01)

RADIOLOGICAL SURVEY MAP FC RM

C331-09 DNSA

SEC RADCON

SURVEY MAP	SURVEY NO.: 01 - ER - 1059 - S

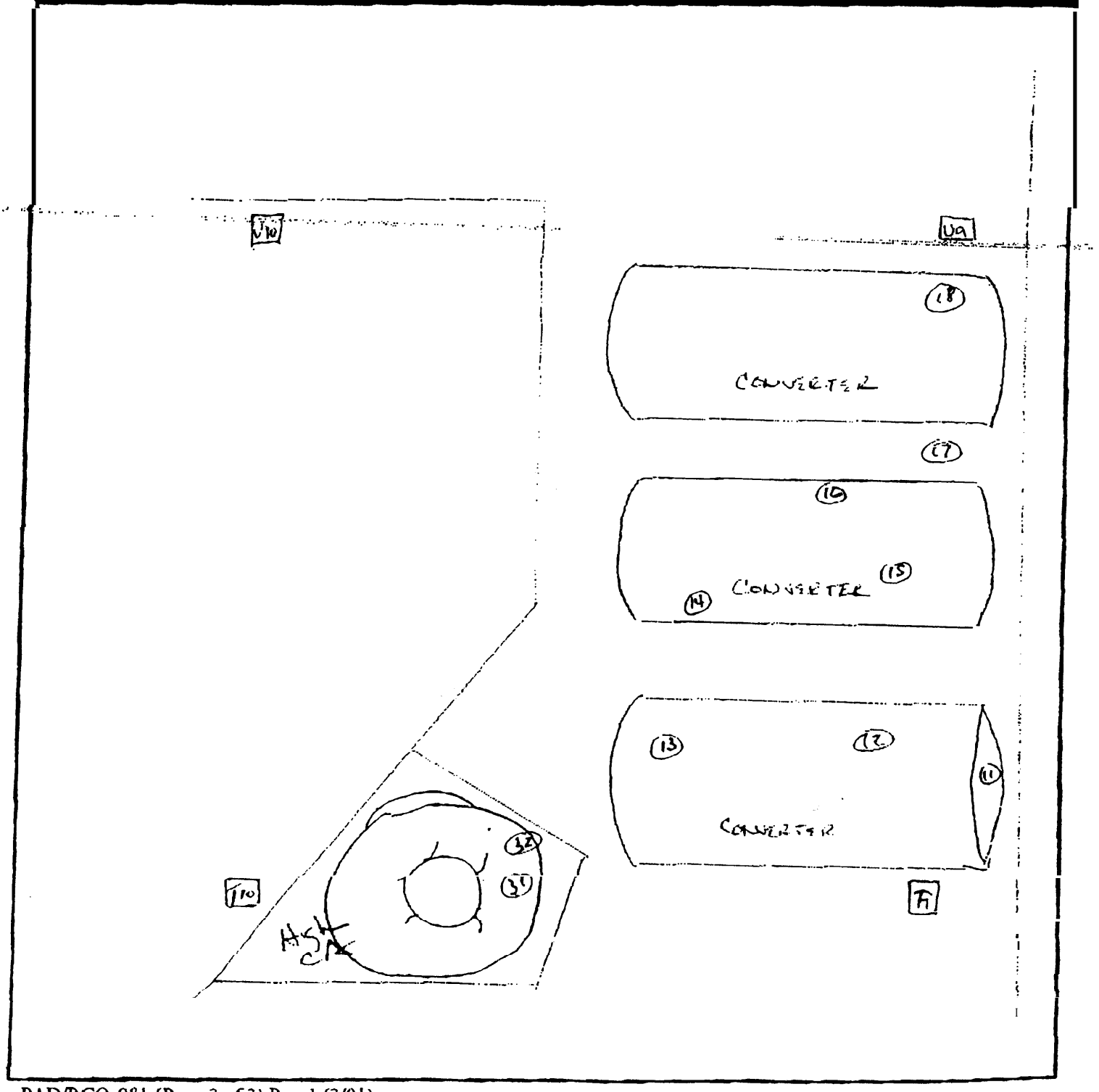

PAD/RCO-081 (Page 3 of 3) Rev.1 (2/01)

RADIOLOGICAL SURVEY MAP FORM

C 331-09 DNFSB

SEC RADCON

SURVEY MAP	SURVEY NO: 01 - ER - 1059 - S

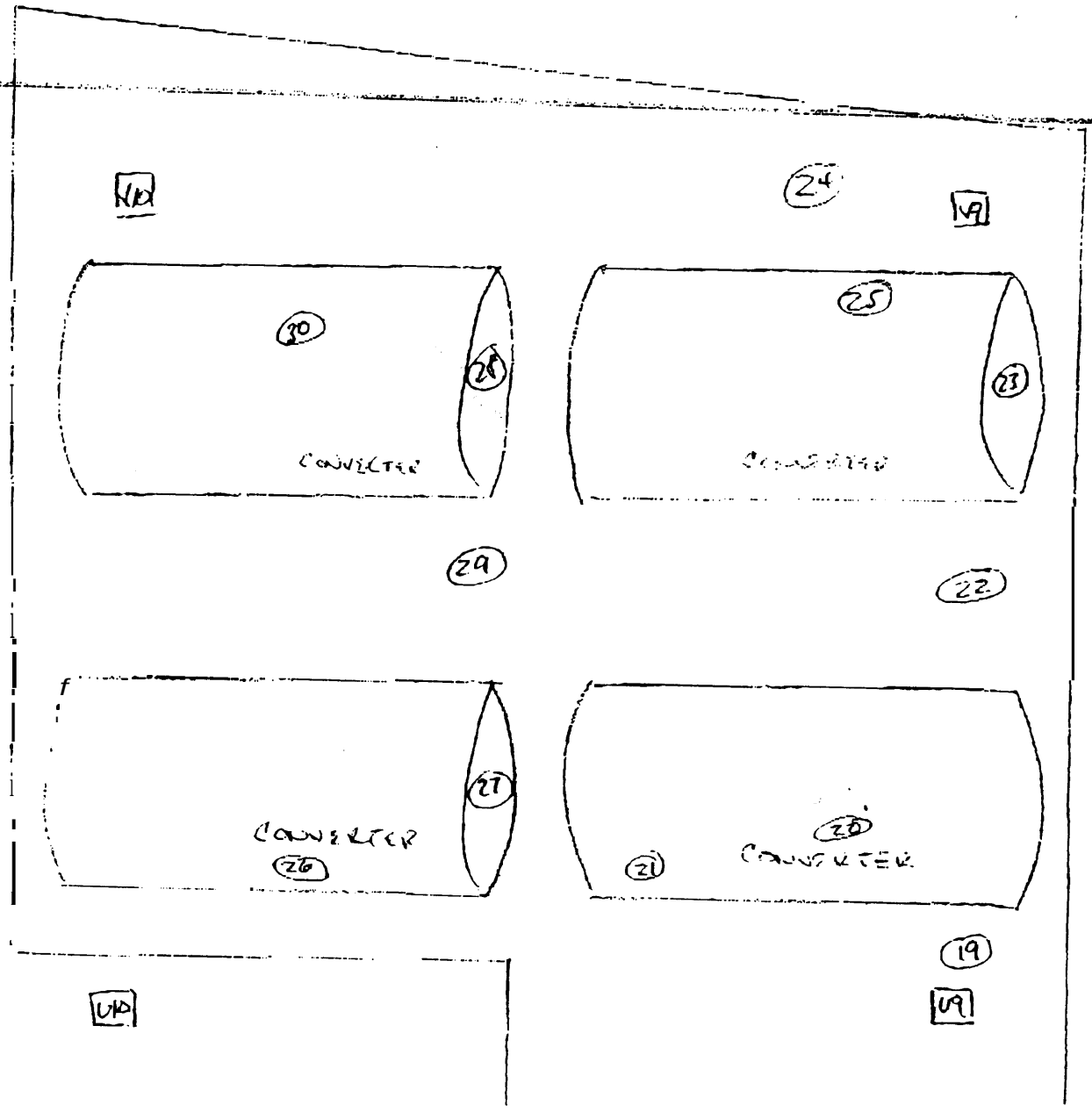

Survey Number 01-ER-1059-S

Smear and Air Sample Activity Report

8/1/01

CAL DATE: 12-6-01

Batch ID:	1 Minute Smear - 200108010847	Acquisition Date:	8/1/01
Group ID:	B	Device Serial Number: 36643	Acquisition Time: (minutes) 1.0
Device Name:	Tennelec Series 5		
Selected Geometry:	Swipe/Smear	Operating Voltage: (volts)	1,387.0

Efficiency Factors			Daily 30 Minute Background CPM		Hutch Critical Level DPM	
Alpha Efficiency -	0.27	± 0.00	Alpha Background (CPM) -	0.10	Alpha Lc -	1.96
Beta Efficiency -	0.40	± 0.01	Beta Background (CPM) -	1.70	Beta Lc -	5.47

Sample ID	Quantity	Alpha DPM (DPM)	2σ	Alpha MDA (DPM)	Beta DPM (DPM)	2σ	Beta MDA (DPM)
20010801084722-B1	0.00	-0.37	0.43	13.96	60.91	25.63	17.71
20010801091123-B2	0.00	10.76	12.86	13.96	567.28	76.71	17.71
20010801091243-B3	0.00	3.34	7.43	13.96	148.65	39.31	17.71
20010801091413-B4	0.00	7.05	10.50	13.96	1,414.57	123.18	17.71
20010801091533-B5	0.00	14.47	14.85	13.96	469.52	69.69	17.71
20010801091653-B6	0.00	21.89	18.18	13.96	178.73	43.03	17.71
20010801091814-B7	0.00	7.05	10.50	13.96	65.93	26.59	17.71
20010801091934-B8	0.00	3.34	7.43	13.96	40.86	21.32	17.71
20010801092054-B9	0.00	14.47	14.85	13.96	121.08	35.57	17.71
20010801092214-B10	0.00	3.34	7.43	13.96	78.46	28.88	17.71
20010801092344-B11	0.00	70.12	32.36	13.94	106.04	33.36	17.71
20010801092504-B12	0.00	10.76	12.86	13.96	218.84	47.55	17.71
20010801092624-B13	0.00	7.05	10.50	13.96	173.72	42.43	17.71
20010801092744-B14	0.00	3.34	7.43	13.96	146.14	38.98	17.71
20010801092904-B15	0.00	7.05	10.50	13.96	50.89	23.57	17.71
20010801093024-B16	0.00	18.18	16.60	13.96	146.14	38.98	17.71
20010801093154-B17	0.00	14.47	14.85	13.96	143.64	38.65	17.71
20010801093314-B18	0.00	18.18	16.60	13.96	1,304.27	118.00	17.71
20010801093434-B19	0.00	3.34	7.43	13.96	176.23	42.73	17.71
20010801093554-B20	0.00	7.05	10.50	13.96	782.86	90.46	17.71
20010801093715-B21	0.00	13.37	14.85	13.96	868.09	95.42	17.71
20010801093835-B22	0.00	3.34	7.43	13.96	85.98	30.16	17.71
20010801094005-B23	0.00	7.05	10.50	13.96	45.87	22.48	17.71
20010801094125-B24	0.00	-0.37	0.43	13.96	158.68	40.58	17.71

Smear and Air Sample Activity Report

Survey Number: 01-ER-1059-S

8/1/01

Efficiency Factors			Daily 30 Minute Background CPM		Batch Critical Level DPM	
Alpha Efficiency -	0.27	± 0.00	Alpha Background (CPM) -	0.10	Alpha Lc -	1.96
Beta Efficiency -	0.40	± 0.01	Beta Background (CPM) -	1.70	Beta Lc -	5.47

Sample ID	Quantity	Alpha DPM (DPM)	2σ	Alpha MDA (DPM)	Beta DPM (DPM)	2σ	Beta MDA (DPM)
20010801094245-B25	0.00	7.05	10.50	13.96	ti-3.42	26.11	17.71
20010801094405-B26	0.00	3.34	7.43	13.96	394.31	63.81	17.71
20010801094525-B27	0.00	3.34	7.43	13.96	201.29	35-03	17.71
20010801094645-B28	0.00	7.05	10.50	13.96	469.52	63.69	17.71
20010801094805-B29	0.00	-0.37	0.43	13.96	111.05	34.11	17.71
20010801094935-B30	0.00	-037	0.43	13.96	10.78	12.34	17.71
20010801095055-B31	0.00	-0.37	0.43	13.36	0.75	7.19	17.71
20010801095215-B32	0.00	-0.37	0.43	13.96	30.83	18.81	17.71
20010801095335-B33	0.00	3.34	7.43	13.96	45-87	22.48	17.71
20010801095455-B34	0.00	-0.37	0.43	13.96	5.77	10.10	17.71
20010801095615-B35	0.00	-0.37	0 43	13.96	8.27	11.28	17.71
20010801095746-B36	0.00	-0.37	0.43	13.96	45.87	22.48	17.71
20010801095906-B37	0.00	-0.37	0.43	13.96	43.37	21.91	17.71
20010801100026-B38	0.00	3.34	7 43	13.96	53.39	24.10	17.71
20010801100146-B39	0.00	10.76	12.86	13.96	38.35	20.72	17.71
20010801100306-B40	0.00	[illegible]	0.43	13.96	45.87	22.48	17.71
20010801100436-B41	0.00	-0.37	0.43	13.96	0.75	7-19	17.71
20010801100556-B42	0.00	3.34	7.43	13.96	73.45	27.99	17.71

Count Room Review: [signature] Sampling Tech Review: [signature]

Radiological Survey Form

Survey No.: 01-ER-1004-5 Date: 7/24/01 Time: 0900 Page 1 of 2

Location of Survey – General (Site/Bldg.)/Specific (Room/Area): C-331 Bldg. DMSA-09 RWP NO: 01-DOE-48-5

Purpose of Survey: CHARACTERIZATION SURVEY

Technician: TOM OVERMAN / Tom Overman Badge: 635381 Material Description: JLG LIFT

Model #: LUDLUM 2929	Serial #: 126118	Cal. due date: 3/7/02	Technician: N/A	Probe Model #: 129505	CF Pl.: 2.75	CF Plane: 2.66	Badge: N/A
Model #: MODEL 12	Serial #: 145961	Cal. due date: 3/22/02		Probe Model #: 44-9	CF Pl.: 4.80	CF Plane: 30.96	
Model #: LUDLUM 2221	Serial #: 68763	Cal. due date: 3/23/02		Probe Model #: 43-5	CF Pl.: 7.11	CF Plane: 14.21	
Model #: N	Serial #: N	Cal. due date: N		Probe Model #: N/A	CF Pl.: N/A	CF Plane: N/A	
Model #: A	Serial #: A	Cal. due date: A		α CF: N/A	β/γ CF: N/A		
Tennelec: Yes ____ No ✓ (If yes, see attached results)				α CF: N/A	β/γ CF: N/A		

Smear or Item No.	Sample Location	BKGD α	Removable α dpm/100cm²	BKGD α	Total α dpm/100cm²	BKGD β/γ	Removable β,γ dpm/100cm²	BKGD β/γ	Total β,γ dpm/100cm²	Results
		L_c		L_c		L_c		L_c		
1-11	FLOOR/STAND AREA	0 / 2.75	< L_c	1 / 33.12	< L_c	.53 / 2.66	< L_c	35 / 426.84	< L_c	N/A
12-26	HANDRAILS	0 / 2.75	< L_c	1 / 33.12	< L_c	.53 / 2.66	< L_c	35 / 426.84	< L_c	
27-30	TIRES	0 / 2.75	< L_c	1 / 33.12	< L_c	.53 / 2.66	< L_c	35 / 426.84	< L_c	
					N/A					

COMMENTS: ~~N/A~~ 10 7240 JLG LIFT # W3356

Released to: GRAY HINES

PAD/RCO-081 (Page 1 of 3) Rev. 1 (2/01)

HP Supervisor Review: Signature/ Date 8-2-2001

COPY

RADIATION SURVEY MAP FORM

SEC RADCON

SURVEY MAP	SURVEY NO.: 01 - EK - 1024 - S

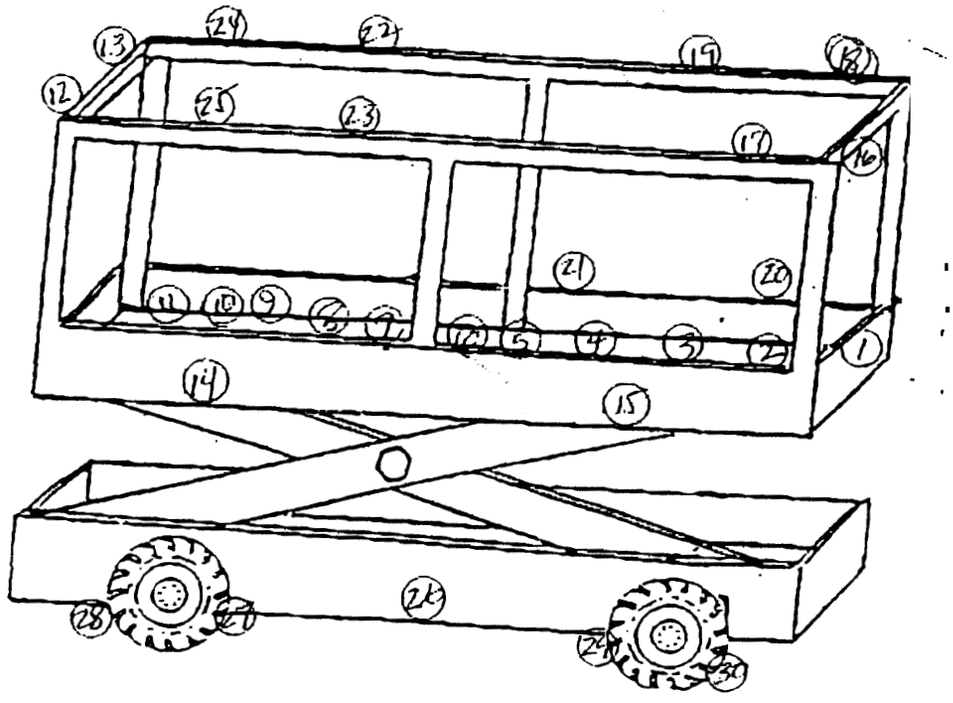

COPY

Aug-15-01 11:58A SafetyBecology Corp 502 441 5182 P.19

Radiological Survey Form

Survey No.: 01-ER-988-S Date: 7/20/01 Time: 1800 RWP NO: 01-DOE-48-S Page 1 of 1

Location of Survey – General (Site/Bldg.)/Specific (Room/Area): C331 MSA C331-09

Purpose of Survey: Characterization

Technician: Matt Maria / M. Klein Badge: 60737 Material Description: NA

Model #:		Serial #:		Cal. date:		Technician:	NA	Badge:	NA
Model #:	N	Serial #:	N	Cal. date:	N	Probe Model #:	N	CF Pt.: N	CF Plane: N
Model #:	A	Serial #:	A	Cal. date:	A	Probe Model #:	A	CF Pt.: A	CF Plane: A
Model #:		Serial #:		Cal. date:		Probe Model #:		CF Pt.:	CF Plane:
Model #:	Ludlum 2929	Serial #:	126118	Cal. date:	3-07-02	α CF: 2.75	β/γ CF: 2.66		
Model #:	NA	Serial #:	NA	Cal. date:	NA	α CF: NA	β/γ CF: NA		

Tennelec: Yes ____ No ✓ (If yes, see attached results)

COPY

Smear or Item No.	Sample Location	BKGD α	Removable α dpm/100cm²	BKGD α	Total α dpm/100cm²	BKGD β/γ	Removable β,γ dpm/100cm²	BKGD β/γ	Total β,γ dpm/100cm²	Remarks
		Lc		Lc		Lc		Lc		
1	floor	0	<Lc			41	3511			*
		2.86				34.71				
2	floor		<Lc				8911			*
3	floor		<Lc				1379			*
4	piece of equip		304				281215			*
5	piece of equip		935				120169			*
6	SOP		<Lc				<Lc			Daily SOP.
					N					
					A					

* COMMENTS: Smears 1-5 taken in high contamination area. (4-5) not RFD'd yet.

Released to: ____

PAD/RCO-081 (Page 1 of 3) Rev. 1 (2/01)

HP Supervisor Review: [signature] / 7-24-2001
Signature/Date

Aug-15-01 11:58A Safety&Ecology Corp 502 441 5182 P.20

Radiological Survey Form

Survey No.: 01-ER-1134-S Date: 8-10-01 Time: 1300 RWP NO: 01-DCE-48-S

Location of Survey – General (Site/Bldg.)/Specific (Room/Area): C-331 DMSA-09

Purpose of Survey: JOB COVERAGE - VERIFY BAR CODE TAGS ON EQUIPMENT Material Description: SEE SAMPLE LOCATION

Technician: JOE MANSIR Badge: 617752 Technician: N/A / N/A Badge: N/A

Model #: LUDLUM 2221	Serial #: 84516	Cal. due date: 3-21-02	Probe Model #: 43-5	CF Pt.: 7	CF Plane: 14
Model #: LUDLUM 12	Serial #: 168823	Cal. due date: 3-21-02	Probe Model #: 44-9	CF Pt.: 4.60	CF Plane: 29.68
Model #:	Serial #:	Cal. due date:	Probe Model #: N	CF Pt.: N	CF Plane: N
Model #: N	Serial #: N	Cal. due date: N	Probe Model #: A	CF Pt.: A	CF Plane: A
Model #: A	Serial #: A	Cal. due date: A	α CF: N	β/γ CF: N	
Model #:	Serial #:	Cal. due date:	α CF: A	β/γ CF: A	

Tennelec: Yes ____ No ✓ (If yes, see attached results)

Smear or Item No.	Sample Location	BKGD α / Lc	Removable α dpm/100cm²	BKGD α / Lc	Total α dpm/100cm²	BKGD β/γ / Lc	Removable β,γ dpm/100cm²	BKGD β/γ / Lc	Total β,γ dpm/100cm²	Remarks
1-10	CA BOUNDARY	1 / 16.31	<Lc	1 / 32.61	N/A	50 / 75.82	<Lc	50 / 489.04	N/A	
11	SOP	↓	↓	↓	↓	↓	↓	↓	↓	
										N
	N		N		N		N		N	
										A
	A	A		A		A		A		

COPY

COMMENTS: N/A

Released to: N/A

HP Supervisor Review: 8-14-2001
Signature/ Date

PAD/RCO-081 (Page 1 of 3) Rev. 1 (2/01)

302 441 5182 P.02

Radiological Survey Form

Survey No.: 01-ER-1285-S Date: 8/29/01 Time: 1310 RWP NO: 01-DOE-48-S

Location of Survey – General (Site/Bldg.)/Specific (Room/Area): C-331-DMSA-9

Purpose of Survey: Release From C-Zone Material Description: N/A

COPY

Technician: M. Foster / Mike Foster Badge: 618472

Technician: N/A / N/A Badge: N/A

Model #	Serial #	Cal. due date	Probe Model #	CF Pt.	CF Plane
Lud-12	168824	3/21/02	44-9	5.24	34.15
Lud-2221	94516	3/21/02	43-5	7.00	14.00

α CF: N/A βγ CF: N/A

Tennelec: Yes ____ No ✓ (If yes, see attached results)

Smear or Item No.	Sample Location	BKGD α / L_c	Removable α dpm/100cm²	BKGD α / L_c	Total α dpm/100cm²	BKGD βγ / L_c	Removable β,γ dpm/100cm²	BKGD βγ / L_c	Total β,γ dpm/100cm²	Remarks
1	Brick Pump	2 / 23.00	<Lc	2 / 16.12	<Lc	50 / 87.22	<Lc	50 / 36.50	<Lc	N/A
2	Bag of Trash	↓	↓	↓	↓	↓	↓	↓	↓	
3-17	Outside C-Zone Floor	↓	↓		N/A	↓	↓		N/A	Boundary Verification
18	Step-off-Pad	↓	↓			↓				N/A
					N/A					

COMMENTS: N/A

Released to: N/A

PAD/RCO-081 (Page 1 of 3) Rev. 1 (2/01)

HP Supervisor Review: [signature] / 8-30-2001
Signature/Date

Bechtel Jacobs Company LLC 502 441 5182 P.01

Radiological Survey Form

Page 1 of 1

Survey No.: 01-ER-1233-S Date: 8-23-01 Time: 1230 RWP NO: 01-DOE-48-6

Location of Survey – General (Site/Bldg.)/Specific (Room/Area): DMSA 331-09

Purpose of Survey: Tape Hanges on Convertess Material Description: See Sample Location Below

Technician: Danny Hayes (Danny Hayes) Badge: 705193 Technician: MARK TUCK (Red Christmesse) Badge: 701935/741053

Model #: Lab 2221	Serial #: 75476	Cal. due date: 4-3-02	Probe Model #: 43-5	CF Pt.: 7.20	CF Plane: 14.52
Model #: Lab 12	Serial #: 83347	Cal. due date: 6-12-02	Probe Model #: 44-9	CF Pt.: 5.20	CF Plane: 33.54
Model #:	Serial #:	Cal. due date:	Probe Model #:	CF Pt.:	CF Plane:
Model #:	Serial #:	Cal. due date:	Probe Model #:	CF Pt.:	CF Plane:
Model #:	Serial #:	Cal. due date:	α CF:	β/γ CF:	
Model #:	Serial #:	Cal. due date:	α CF:	β/γ CF:	

Tennelec: Yes ____ No ____ (If yes, see attached results)

Smear or Item No.	Sample Location	BKGD α / L_c	Removable α dpm/100cm²	BKGD α / L_c	Total α dpm/100cm²	BKGD β/γ / L_c	Removable β,γ dpm/100cm²	BKGD β/γ / L_c	Total β,γ dpm/100cm²	Remarks
1-10	DMSA 331-09	2 / 23.93	< LC	2 / 47.86	na	100 / 121.16	< LC	100 / 781.51	na	na
11	SOP	2 / 23.93	< LC	2 / 47.86	na	100 / 121.16	< LC	100 / 781.51	na	

COMMENTS: na

Released to: na

PAD/RCO-081 (Page 1 of 3) Rev. 1 (2/01)

HP Supervisor Review: [signature], 8/30/01
Signature/ Date

COPY

502 441 5182 P.04

Radiological Survey Form

Survey No.: 01-DM-11-S

Date: 9-6-01 Time: 1230

RWP NO: 01-DOE-48-S

Location of Survey – General (Site/Bldg.)/Specific (Room/Area): C-331 DMSA-09

Purpose of Survey: CHARACTERIZATION - MISC. EQUIPMENT

Technician: JOE MANSIR Joe Mansir Badge: 617752 Technician: M. Moir / M. Moir Badge: 60737

Material Description: SEE SAMPLE LOCATION

Model #: LUBLUM-2224	Serial #: 127831	Cal. due date: 7-10-02	Probe Model #: 43-5	CF Pt.: 7.16	CF Plane: 14.32
Model #: LUBLUM-12	Serial #: 168823	Cal. due date: 3-21-02	Probe Model #: 44-9	CF Pt.: 4.66	CF Plane: 29.68
Model #: N	Serial #: N	Cal. due date: N	Probe Model #: N	CF Pt.: N	CF Plane: N
Model #:	Serial #:	Cal. due date:	Probe Model #:	CF Pt.:	CF Plane:
Model #: A	Serial #: A	Cal. due date: A	Probe Model #: A	CF Pt.: A	CF Plane: A
Model #: LUBLUM-2929	Serial #: 126141	Cal. due date: 12-12-01	α CF: N/A	βγ CF: N/A	
Tennelec: Yes ____ No ✓ (If yes, see attached results)			α CF: 2.81	βγ CF: 2.89	

RO-2 #6300 CAL. DUE 12-19-01
β⁻CF=3.6 LLD=0.4 MR/HR.

Smear or Item No.	Sample Location	BKGD α / Lc	Removable α dpm/100cm²	BKGD α / Lc	Total α dpm/100cm²	BKGD βγ / Lc	Removable βγ dpm/100cm²	BKGD βγ / Lc	Total βγ dpm/100cm²	Comments
1	COOLER E 00001	1 / 6.54	<LC	1 / 33.36	57	74 / 58.01	216	80 / 618.54	6530	
2	↓	↓	<LC	↓	301	↓	219	↓	11,278	
3	8" CHOKER RFD 110469		11.24		57		101		2374	
4	4" BLANK FLANGE RFD 110467		8.67		243		1664		62,922	N
5	17" BLANK FLANGE RFD 110465		<LC		43		3087		59,954	
6	20" BLANK FLANGE RFD 110466		<LC		43		795		21,370	A
7	CONVERTER SADDLE RFD 110463		19.6		57		387		7123	
8	CONVERTER SADDLE RFD 110462		14		444		994		39,178	
9	CONVERTER SADDLE RFD 110464		<LC		372		2168		92,602	
10	CONV. CONE PLATE RFD 110461	↓	<LC	↓	616	↓	1485	N/A	N/A	<0.4 MREM/HR β CONTACT; 14.4 MRAD/HR β⁻ CONTACT

COMMENTS: 100% SURVEY ON ITEMS NOT COMPLETED. ACCESSIBLE SURFACE ONLY.

COPY

Released to: N/A

HP Supervisor Review: [signature] 9-7-2001
Signature/ Date

Radiological Survey Continuation Form

Survey No.: 01-DM-11-S

Smear α Item No	Sample Location	BKGD α / Lc	Removable α dpm/100cm²	BKGD α / Lc	Total α dpm/100cm²	BKGD β/γ / Lc	Removable β,γ dpm/100cm²	BKGD β/γ / Lc	Total β,γ dpm/100cm²	Remarks
11	21" BLANK FLANGE RFD 110320	1 / 6.54	<LC	1 / 33.36	301	74 / 58.01	1358	80 / 618.59	33,242	N/A
12	COMPONENT CONE RFD 110474	1 / 7 16.68	36		2878	55 / 79.52	158,000	N/A	N/A	<0.4 MREM/HR γ CONTACT 720 MRAD/HR β- CONTACT 163 MRAD/HR β- @ 30 CM
13	COMPONENT CONE RFD 110472		<LC		501		27,600			<0.4 MREM/HR γ CONTACT 1414 MRAD/HR β- CONTACT
14	17" BLANK FLANGE RFD 110476		<LC		143		4600	80 / 618.59	74,794	N/A
15	17" BLANK FLANGE RFD 110471		57		1876		27,600	N/A	N/A	<0.4 MREM/HR γ CONTACT 93.6 MRAD/HR β- CONTACT
16	COMPONENT CONE RFD 110319		36		601		115,000			<0.4 MREM/HR γ CONTACT 115.2 MRAD/HR β- CONTACT
17	INTERNAL COMPONENT RFD 110475		36		9208		9200			<0.4 MREM/HR γ CONTACT 18 MRAD/HR β- CONTACT
18	COMPONENT CONE RFD 110473		57		558		4600	80 / 618.59	92,602	
19-23	ST 70 BOX OF MISC. EQUIP (OUTSIDE BOX) RFD 110476		<LC		<LC		<LC		<LC	
24	SOP				N				N	N
25-32	CA BOUNDARY			A				A		
	N			N				N		A
	A		A				A			

COPY

COMMENTS/NOTES:

100% SURVEY ON ITEMS NOT COMPLETED. ACCESSIBLE SURFACE ONLY.

Radiological Survey Form

Survey No.: 01-DM-06-S Date: 9-5-01 Time: 1245 RWP NO: 01-DOE-48-S

Location of Survey – General (Site/Bldg.)/Specific (Room/Area): C-331 DMSA-09

Purpose of Survey: CHARACTERIZATION – CONVERTERS Material Description: SEE SAMPLE LOCATION

COPY

Technician: JOE MANSIR / Joe Mansir Badge: 617752 Technician: Matt Miran / MATT MIRAN Badge: 607387

Model #: LUDLUM-2224	Serial #: 127831	Cal. due date: 7-10-02	Probe Model #: 43-5	CF Pl.: 7.16	CF Plane: 14.32		
Model #: LUDLUM-12	Serial #: 168823	Cal. due date: 3-21-02	Probe Model #: 44-9	CF Pl.: 4.60	CF Plane: 27.68		
Model #: N	Serial #: N	Cal. due date: N	Probe Model #: N	CF Pl.: N	CF Plane: N		
Model #: A	Serial #: A	Cal. due date: A	Probe Model #: A	CF Pl.: A	CF Plane: A		
Model #:	Serial #:	Cal. due date:	α CF: N	βγ CF: N			
Tennelec: Yes ✓ No ____ (If yes, see attached results)			α CF: A	βγ CF: A			

RO-2 #6300 CAL DUE 12-19-01
B CF = 3.6 ALD = 0.4 mR/HR.

Smear or Item No.	Sample Location	BKGD α		Removable α dpm/100cm²	BKGD α		Total α dpm/100cm²	BKGD βγ		Removable βγ dpm/100cm²	BKGD βγ		Total βγ dpm/100cm²	Remarks
			L_c			L_c			L_c			L_c		
1	CONVERTER RFD 110460	*	*	*	1	33.36	215	*	*	*	80	618.59	1187	
2	↓						4282						8904	
3	↓						358						27,306	
4	CONVERTER RFD 110459						215						1187	N
5	↓						86						1781	
6	↓						72						10,091	
7	CONVERTER RFD 110451						57						14,840	A
8	↓						43						74,794	
9	↓						43						39,178	
10	CONVERTER RFD 110458						7103						< L.C.	

COMMENTS: * SEE ATTACHED TENNELEC PRINTOUT. 100% SURVEY ON ITEMS NOT COMPLETED. ACCESSIBLE SURFACE ONLY.

Released to: N/A

PAD/RCO-081 (Page 1 of 3) Rev. 1 (2/01)

HP Supervisor Review: [signature] / 9-7-2001
Signature/ Date

Radiological Survey Continuation Form

Survey No.: 01-DM-06-S

Smear or Item No.	Sample Location	BKGD α / Lc	Removable α dpm/100cm²	BKGD α / Lc	Total α dpm/100cm²	BKGD β/γ / Lc	Removable β,γ dpm/100cm²	BKGD β/γ / Lc	Total β,γ dpm/100cm²	Remarks
11	CONVERTER RFD 110458	* / *	*	/ 33.36	72	* / *	*	50 / 68.59	<Lc	COPY
12	↓				86				2968	
13	CONVERTER RFD 110457				730				3562	N
14	↓				1017				<Lc	A
15	↓				444				<Lc	
16	CONVERTER RFD 110456				902				140,090	CONTACT DOSE RATE <0.4 MREM/HR γ 5.4 MRAD/HR β⁻
17	↓				988				1,066,106	CONTACT DOSE RATE <0.4 MREM/HR γ 21.6 MRAD/HR β⁻
18	↓				<Lc				<Lc	
19	CONVERTER RFD 110455				57				62,922	
20	↓				415				51,050	N
21	↓				43				56,986	
22	CONVERTER RFD 110454				72				<Lc	A
23	↓				86				<Lc	
24	↓				57				68,858	

COMMENTS/NOTES:

* SEE ATTACHED TENNELEC PRINTOUT. 100% SURVEY ON ITEMS NOT COMPLETED. ACCESSIBLE SURFACE ONLY.

Radiological Survey Continuation Form

Survey No.: 01-071-06-3

Smear or Item No.	Sample Location	BKGD α / L_c	Removable α dpm/100cm²	BKGD α / L_c	Total α dpm/100cm²	BKGD β/γ / L_c	Removable β,γ dpm/100cm²	BKGD β/γ / L_c	Total β,γ dpm/100cm²	Remarks
25	CONVERTER RFD 110453	* / *	*	1 / 33.36	86	* / *	*	RD / 618.59	62,922	N/A
26	↓	↓	↓	↓	115	↓	↓	↓	502,186	CONTACT DOSE RATE <0.4 MREM/HR γ 9 MRAD/HR β⁻
27	↓	↓	↓	↓	43	↓	↓	↓	33,242	N
28	CONVERTER RFD 110452	↓	↓	↓	86	↓	↓	↓	45,114	A
29	↓	↓	↓	↓	172	↓	↓	↓	709,946	CONTACT DOSE RATE <0.4 MREM/HR γ 18 MRAD/HR β⁻
30	↓	↓	↓	↓	43	↓	↓	↓	472,506	CONTACT DOSE RATE <0.4 MREM/HR γ 5.4 MRAD/HR β⁻
31	SOP	↓	↓	↓	N	↓	↓	↓	N	N
32-39	CA BOUNDARY	↓	↓	A		↓	↓	A		A
			N							A
	A								A	

COMMENTS/NOTES: * SEE ATTACHED TENNELEC PRINTOUT. 100% SURVEY ON ITEMS NOT COMPLETED. ACCESSIBLE SURFACE WALL

COPY

SEC RadCon Alliance - Paducah

2:47:16P

Survey Number 01-DM-~~02~~ 06 5 5/7/01

Smear and Air Sample Activity Report

9/5/01

Batch ID:	1 Minute Smear - 200109051353			Acquisition Date:	9/5/01
Group ID:	A	Device Serial Number:	68676	Acquisition Time: (minutes)	1.0
Device Name:	Tennelec Series 2				
Selected Geometry:	Swipe/Smear			Operating Voltage: (volts)	1,485.0

Cal Due: 12/21/01

Efficiency Factors			Daily 30 Minute Background CPM		Batch Critical Level DPM	
Alpha Efficiency -	0.23	± 0.00	Alpha background (CPM) -	0.23	Alpha Lc -	3.57
Beta Efficiency -	0.29	± 0.01	Betn Background (CPM) -	1.20	Beta Lc -	6.42

Sample ID	Quantity	Alpha DPM (DPM)	2σ	Alpha MDA (DPM)	Beta DPM (DPM)	2σ	Beta MDA (DPM)
20010905135401-A1	0.00	7.81	12.53	19.11	23.82	19.89	22.32
20010905135542-A2	0.00	29.92	23.41	19.11	107.91	39.85	22.32
20010905135702-A3	0.00	21.07	19.79	19.11	202.51	54.33	22.32
20010905135822-A4	0.00	12.23	15.34	19.11	41.34	25.35	22.32
20010905135942-A5	0.00	3.39	8.88	19.11	13.31	15.74	22.32
20010905140102-A6	0.00	12.23	15.34	19.11	374.18	74.07	22.32
20010905140222-A7	0.00	12.23	15.34	19.11	170.97	49.95	22.32
20010905140342-A8	0.00	29.92	23.41	19.11	1,386.72	148.29	22.32
20010905140502-A9	0.00	12.23	15.34	19.11	622.94	96.41	22.32
20010905140632-A10	0.00	34.34	25.03	19.11	62.36	30.66	22.32
20010905140752-A11	0.00	12.23	15.34	19.11	72.87	33.00	22.32
20010905140912-A12	0.00	12.23	15.34	19.11	125.43	42.88	22.32
20010905141032-A13	0.00	12.23	15.34	19.11	135.94	44.61	22.32
20010905141152-A14	0.00	-1.03	0.78	13.11	174.48	50.45	22.32
20010905141312-A15	0.00	12.23	15.34	19.11	9.81	14.09	22.32
20010905141433-A16	0.00	21.07	19.79	19.11	269.08	62.66	22.32
20010905141553-A17	0.00	127.18	47.68	19.11	2,280.13	196.87	22.32
20010905141713-A18	0.00	3.39	8.88	19.11	58.86	29.84	22.32
20010905141833-A19	0.00	3.39	8.88	19.11	311.12	67.43	22.32
20010905141953-A20	0.00	25.50	21.68	19.11	629.95	96.97	22.32
20010905142123-A21	0.00	-1.03	0.78	19.11	125.43	42.88	22.32
20010905142243-A22	0.00	7.81	12.53	19.11	65.87	31.46	22.32
20010905142403-A23	0.00	47.60	29.35	19.11	1,582.92	159.67	22.32
20010905142523-A24	0.00	16.65	17.70	19.11	934.76	119.56	22.32

Copy

SEC RadCon Alliance - Paducah

2:47:16P

Survey Number 01-DM-~~03~~ 06-5

Smear and Air Sample Activity Report

9/5/01

Efficiency Factors			Daily 30 Minute Background CPM		Batch Critical Level DPM	
Alpha Efficiency -	0.23	± 0.00	Alpha Background (CPM) -	0.23	Alpha Lc -	3.57
Beta Efficiency -	0.29	± 0.01	Beta Background (CPM) -	1.20	Beta Lc -	6.42

Sample ID	Quantity	Alpha DPM (DPM)	2σ	Alpha MDA (DPM)	Beta DPM (DPM)	2σ	Beta MDA (DPM)
20010905142643-A25	0.00	12.23	15.34	19.11	398.71	76.52	22.32
20010905142803-A26	0.00	63.23	34.28	19.11	2,437.79	204.77	22.32
20010905142923-A27	0.00	3.39	8.88	19.11	160.46	48.41	22.32
20010905143043-A28	0.00	38.76	26.55	19.11	801.62	110.13	22.32
20010905143203-A29	0.00	52.02	30.66	19.11	1,754.60	169.24	22.32
20010905143333-A30	0.00	7.81	12.53	19.11	160.46	48.41	22.32
20010905143454-A31	0.00	-1.03	0.78	19.11	16.82	17.23	22.32
20010905143614-A32	0.00	-1.03	0.78	19.11	34-34	23.32	22.32
20010905143734-A33	0.00	-1.03	0.78	19.11	20.32	18.61	22.32
20010905143854-A34	0.00	-1.03	0.78	19.11	34.34	23.32	22.32
20010905144014-A35	0.00	-1.03	0.78	13.11	37.84	24.35	22.32
20010905144134-A36	0.00	7.81	12.53	19.11	34.34	23.32	22.32
20010905144254-A37	0.00	-1.03	0.78	19.11	37.84	24.35	22.32
20010905144414-A38	0.00	-1.03	0.78	19.11	27.33	21.09	22.32
20010905144534-A39	0.00	7.81	12.53	19.11	34.34	23.32	22.32

COPY

unt Room Review: Mike

Sampling Tech Review: Joe Manzini

Section 11.

HP SMEAR AND AIR SAMPLE ACTIVITY REPORT

AIR SAMPLE CALCULATION WORKSHEET

DEPARTMENT COPY 9/18/01 PAGE 1 OF 3

SURVEY INFORMATION SAMPLING RCT NAME Tom OVERMAN SIGNATURE [signature] BADGE 635381

Purpose of Survey: Job Coverage/ General Area - Low Vol. High Vol. Lapel Environmental Other:

Project-Building/Location: C-331 Bldg. DMSA-09 Work Description: DMSA

Survey #: 01- ER - 983 -A RWP #: 01-DOE- 48 - 5

SAMPLING INSTRUMENTATION

Model: ☒ HD-29A OAVS-28A ☐ MRV-1023CV ☐ BuckHF ☒ BuckIH ☐ SKC BZA ☐ TFIA ☐ HVP-3800AFC ☐ Basic-12 ☐ VSS-12

Serial No.: 29242 Cal. Due Date: 8/11/01

MEDIA DESCRIPTION

Filter Media: ☐ What-41 – 4 inch ☒ MF ☐ What-41 – 8x10 inch ☐ AA

NOTE: 1 CFM = 28.32 LPM

Date Start	Start Time	Start Flow CFM / LPM	Stop Date	Stop Time	Stop Flow CFM / LPM	Flow Duration (Minutes) †	Average Flow Rate (LPM)	Total Air Volume (L)
*	*	*	*	*	*	*	9.393	197.70

Area Posted as ARA? ☐ Yes ☒ No

Were Respirators Worn? ☐ Yes ☒ No

Respirator Type and Protection Factor? ☒ N/A ☐ APR (50) ☐ PAPR or Supplied Air Hood (1000) ☐ SCBA (10000) ☐ Airline or Supplied Air Full Face (2000)

Lapel Worn By: T. Overman

Badge Number: 635381

INSTRUMENTATION USED	Serial #:	Cal Due Date:	Alpha Efficiency	Beta Efficiency
☐ Ludlum 2929 ☐ Tennelec Series 2 / Series 5 ☐ Berthold LB770	126115	5-15-02	3545	.3319
☐ Ludlum 2929 ☐ Tennelec Series 2 / Series 5 ☐ Berthold LB770	N/A			

ANALYSIS INFORMATION

DATE	TIME	Type	Bkg. Time (Minutes)	Counter Lc (DPM)	Counter MDA (DPM)	Sample Count Time (Minutes)	Gross Sample (CPM)	Bkg. (CPM)	Net Sample (CPM)	Net Sample (DPM) ††	Error 2σ (DPM)
7/25/01	0745	Alpha	480	0.27	0.57	300	0.83	0.64	0.19	0.54	0.36
		Beta	480	2.41	4.85	300	48.13	43.70	4.43	13.35	3.02

DATE	TIME	Type	Bkg. Time (Minutes)	Counter Lc (DPM)	Counter MDA (DPM)	Sample Count Time (Minutes)	Gross Sample (CPM)	Bkg. (CPM)	Net Sample (CPM)	Net Sample (DPM) ††	Error 2σ (DPM)
N/A		Alpha									
		Beta									

ANALYSIS RESULTS CALCULATED BY: NAME Julie Woods SIGNATURE Julie Woods BADGE 703 1

Alpha DAC (µCi/ml)	Posting Level (µCi/ml)	Concentration (µCi/ml)	Concentration (% DAC) †††
2E-12	5E-13	1.85E-12	< MDC
Beta DAC (µCi/ml)	**Posting Level (µCi/ml)**	**Concentration (µCi/ml)**	**Concentration (% DAC) †††**
6 E-08	1.5 E-08	3.20E-11	5.33E-2

† ☒ (Lapels Only) Sample did not run for minimum time of 120 minutes. Detector MDA @ this run time may exceed 10% of DAC.

Alpha MDC (µCi/ml) = 1.95E-12 Beta MDC (µCi/ml) = 1.16E-11

COPY

†† Send samples > 100 DPM Alpha to the laboratory for isotopic analysis.

††† Notify Operations Support Manager or designee when 10% of DAC is exceeded.

* ☐ See Air Sample Calculation Worksheet Continuation Form.

COUNTS α 248, β 14440

Reviewed By: WC Hoda Date: 7-30-01 Data Entry ICR 7-31

PADIRCO-037 Rev. 10 (07/01)

AIR SAMPLE CALCULATION WORKSHEET

CONTINUATION FORM

Air Sample # 01 - **ER** - 983 - **A** **RWP #** 01 - **DOE** - 48 - 15

Lapel User	Badge / SSN#	Date On	Time On	Start Flow LPM	Date Off	Time Off	Stop Flow LPM	Flow Duration (minutes)	Average Flow Rate LPM	Sample Volume (L)
Tom OVERMAN	635381	7/20/01	0950	4.395	7/20/01	1035	4.392	45	4.393	197.70
					N					
					A					
TOTALS										N/A

Comments:

only 1 entry made.

N/A

Matt Morin
Name

Matt Morin
Signature

7/20/01
Datd

COPY

LOW VOLS/LAPEL BZA AIR SAMPLE CALCULATIONS

Survey Number	01-ER-983-A		
Start Date/Time		Start Flow LPM	
End Date/Time		Stop Flow LPM	
	1/0/00 0:00	Average Flow	0.00
		Total Volume Air (L)	197.70
Days Elapsed	0		
Hours Elapsed	0		
Minutes Elapsed	0		
Total Minutes	0		
Activity in dpm-Alpha	0.54	**Alpha Concentration in microCi/mL**	1.85E-12
Activity in dpm-Beta	13.35	% 2e-12 (Based on Np-237)	9.25E+01
Volume in L	197.701	% 2e-11	9.25E+00
Volume in mL	197700.00	% 8e-11	2.31E+00
		For a Different Percent DAC Enter DAC Value Below	
Alpha Activity by 4.74E-7	2.5596E-07	1.00E-11	1.85E+01
arV (.7)(1)(Volume in mL)	138390		
Beta Activity by 4.74E-7	6.3279E-06	**Beta Concentration in microCi/mL**	3.20E-11
arV (1)(1)(Volume in mL)	197700	% 6E-8 (Based on Th-234)	5.33E-02
		For a Different Percent DAC Enter DAC Value Below	
		6.00E-08	5.33E-02

Use This for Calculating Minimum Detectible Concentration in MicroCi/mL

Enter Alpha MDA	0.57	Enter Beta MDA	4.85
Alpha MDA*4.74E-7	2.7018E-07	Beta MDA*4.74E-7	2.2989E-06
arV (.7)(1)(Vol. In mL)	138390	arV (1)(1)(Vol. In mL)	197700
Alpha MDC in microCi/mL	1.95E-12	Beta MDC in microCi/mL	1.16E-11

Use This For Calculating +/- 2 Sigma on Air Samples Counted on 2929's

	ALPHA		BETA
Gr Sample Count Rate,cpm	0.83	Gr Sample Count Rate,cpm	48.13
Gr Sample Count Time,min	300	Gr Sample Count Time,min	300
Bkgr. Count Rate, cpm	0.64	Bkgr. Count Rate, cpm	43.7
Bkgr Count Time, min.	480	Bkgr Count Time, min.	480
Counter Efficiency%	0.3545	Counter Efficiency%	0.3319
+/- 2 Sigma, dpm	0.36	+/- 2 Sigma, dpm	3.02

NOTES:

DATA TO BE ENTERED GOES IN

RESULTS ARE DISPLAYED IN

Printed Name: Julie Woods

Signature & Date: Julie Woods 7/27/01

COPY

AIR SAMPLE CALCULATION WORKSHEET

RECORD COPY KLF 8/8/01 PAGE 1 OF 3

SURVEY INFORMATION SAMPLING RCT NAME John Gaw SIGNATURE John Gaw BADGE C35941

Purpose of Survey. Job Coverage/ General Area - Low Vol High Vol. Lapel Environmental Other:

Project-Building/Location: DMSA 331-09 Work Description: Initial Entry

Survey #: 01- ER - 1011 -A RWP #: 01-DOE- 48 - S

SAMPLING INSTRUMENTATION

Model: OHD-29A ☐ AVS-28A ☑ MRV-1023CV ☐ BuckHF ☐ BuckIH ☐ SKC BZA ☐ TFIA ☐ HVP-3800AFC ☐ Basic-I2 ☐ VSS-12

Serial No.: 9324 Cal. Due Date: 7/18/02

MEDIA DESCRIPTION

Filter Media: ☐ What41 – 4 inch ☐ MF ☐ What-41 – 8x10 inch ☑ AA

NOTE: 1 CFM = 28.32 LPM

Start Date	Start Time	Start Flow CFM / LPM	Stop Date	Stop Time	Stop Flow CFM / LPM	Flow Duration (Minutes) †	Average Flow Rate (LPM)	Total Air Volume (L)
7/20/01	1300	52	7/24/01	1325	54	5785	53	306605

Area Posted as ARA? ☐ Yes ☑ No

Were Respirators Worn? ☐ Yes ☑ No

Respirator Type and Protection Factor? ☑ N/A ☐ APR (50) ☐ PAPR or Supplied Air Hood (1000) ☐ SCBA (10000) ☐ Airline or Supplied Air Full Face (2000)

Lapel Worn By:

Badge Number: N/A

INSTRUMENTATION USED	Serial #:	Cal Due Date:	Alpha Efficiency	Beta Efficiency
☑ Tennelec Series 2 / Series 5 ☐ Ludlum 2929 ☐ Berthold LB770	68676	12-21-01	0.23	0.29
INSTRUMENTATION USED ☐ Tennelec Series 2 / Series 5 ☐ Ludlum 2929 ☐ Berthold LB770	Serial #: N/A	Cal Due Date:	Alpha Efficiency	Beta Efficiency

DATE	TIME	Type	Bkg. Time (Minutes)	Counter Lc (DPM)	Counter MDA (DPM)	Sample Count Time (Minutes)	Gross Sample (CPM)	Bkg. (CPM)	Net Sample (CPM)	Net Sample (DPM) ††	Error 2σ (DPM)
7/27/01	1223	Alpha	30	0.65	1.90	20	1.57	0.10	1.47	6.41	2.52
		Beta	30	1.52	3.50	20	12.64	0.87	11.77	40.58	5.84
DATE	TIME	Type	Bkg.Time (Minutes)	Counter Lc (DPM)	Counter MDA (DPM)	Sample Count Time (Minutes)	Gross Sample (CPM)	Bkg. (CPM)	Net Sample (CPM)	Net Sample (DPM) ††	Error 2σ (DPM)
N/A		Alpha									
		Beta									

ANALYSIS RESULTS CALCULATED BY: NAME Julie Woods **SIGNATURE** Julie Woods **BADGE** 703511

Alpha DAC (µCi/ml)	Posting Level (µCi/ml)	Concentration (µCi/ml)	Concentration (% DAC) †††
2E-12	5E-13	1.42E-14	7.08E-1
Beta DAC (µCi/ml)	**Posting Level (µCi/ml)**	**Concentration (µCi/ml)**	**Concentration (% DAC) †††**
6 E-08	1.5 E-08	6.27E-14	1.05E-4

† ☐ **(Lapels Only) Sample did not run for minimum time of 120 minutes. Detector MDA @ this run time may exceed 10% of DAC.**

Alpha MDC (µCi/ml) = 4.20E-15 **Beta MDC** (µCi/ml) = 5.41E-15

†† **Send samples > 100 DPM Alpha to the laboratory for isotopic analysis.**

††† **Notify Operations Support Manager or designee when 10% of DAC is exceeded.**

COPY

* ☐ See Air Sample Calculation Worksheet Continuation Form.

Reviewed By: WC Hedge Date: 7-30-01 Data Entry KL 7-31

PAD/RCO-037 Rev. 10 (07/01)

SEC RadCon Alliance - Paducah

Survey Number 01-ER-1011-A

Smear and Air Sample Activity Report

7127101

Batch ID:	20 Minute **Air** Samples - 200107271223	Acquisition Date:	7/27/01
Group ID:	A Device Serial Number: 68676	Acquisition Time: (minutes)	20.0
Device Name:	Tennelec Series 2		
Selected Geometry:	Swipe/Smear	Operating Voltage: **(volts)**	1,485.0

Efficiency Factors			Daily 30 Minute Background CPM		Batch Critical Level DPM	
Alpha Efficiency -	0.23	± 0.00	Alpha Background (CPM) -	0.10	Alpha Lc -	0.65
Beta Efficiency -	0.29	± 0.01	Beta Background (CPM) -	0.87	Beta Lc -	1.52

Sample ID	Quantity	Alpha DPM **(DPM)**	2σ	Alpha MDA **(DPM)**	Beta DPM **(DPM)**	2σ	Beta MDA **(DPM)**
200 10727122402-Al	0.00	**6.41**	2.52	1.90	**40.58**	5.84	3.50

COPY

Count Room Review: Kris Weitkamp

Sampling Tech Review: NA

LOW VOLS/LAPEL BZA AIR SAMPLE CALCULATIONS

Survey Number	01-ER-1011-A
Start Date/Time	7/20/01 13:00
End Date/Time	7/24/01 13:25
	1/4/00 0:25

Start Flow LPM	52
Stop Flow LPM	54
Average Flow	53.00
Total Volume Air (L)	306605.00

Days Elapsed	4	5760
Hours Elapsed	0	0
Minutes Elapsed	25	25
Total Minutes		5785

Activity in dpm-Alpha	6.41
Activity in dpm-Beta	40.58
Volume in L	306605.00
Volume in mL	306605000.00
Alpha Activity by 4.74E-7	3.03834E-06
arV (.7)(1)(Volume in mL)	214623500
Beta Activity by 4.74E-7	1.92349E-05
arV (1)(1)(Volume in mL)	306605000

Alpha Concentration in microCi/mL	1.42E-14
% 2e-12 (Based on Np-237)	7.08E-01
% 2e-11	7.08E-02
% 8e-11	1.77E-02
For a Different Percent DAC Enter DAC Value Below	
1.00E-11	1.42E-01
Beta Concentration in microCi/mL	6.27E-14
% 6E-8 (Based on Th-234)	1.05E-04
For a Different Percent DAC Enter DAC Value Below	
6.00E-08	1.05E-04

Use This for Calculating Minimum Detectible Concentration in MicroCi/mL

Enter Alpha MDA	1.9	Enter Beta MDA	3.5
Alpha MDA*4.74E-7	9.006E-07	Beta MDA*4.74E-7	0.000001659
arV (.7)(1)(Vol. In mL)	214623500	arV (1)(1)(Vol. In mL)	306605000
Alpha MDC in microCi/mL	4.20E-15	Beta MDC in microCi/mL	5.41E-15

Use This For Calculating +/- 2 Sigma on Air Samples Counted on 2929's

	ALPHA		BETA
Gr Sample Count Rate,cpm		Gr Sample Count Rate,cpm	
Gr Sample Count Time,min	300	Gr Sample Count Time,min	300
Bkgr. Count Rate, cpm		Bkgr. Count Rate, cpm	
Bkgr Count Time, min.	480	Bkgr Count Time, min.	480
Counter Efficiency%		Counter Efficiency %	
+/- 2 Sigma, dpm	#DIV/0!	+/- 2 Sigma, dpm	#DIV/0!

NOTES:

DATA TO BE ENTERED GOES IN

RESULTS ARE DISPLAYED IN

Printed Name: Julie Woods

Signature & Date: Julie Woods 7/30/01

COPY

AIR SAMPLE CALCULATION WORKSHEET

RECORD COPY KLK 9/18/01 PAGE 1 OF 3 JW/10

SURVEY INFORMATION SAMPLING RCT NAME D Hayes SIGNATURE D Hayes BADGE 705193

Purpose of Survey: (Job Coverage) General Area - Low Vol. (High Vol.) Lapel Environmental Other:

Project-Building/Location: DMSA 331-09 Col R10 Work Description: Tagging material inside CA

Survey #: 01- ER - 1104 -A RWP #: 01-DOE- 48 - 5

SAMPLING INSTRUMENTATION

Model: ☐HD-29A ☐AVS-28A ☐ MRV-1023CV ☐ BuckHF ☐ BuckIH ☐ SKC BZA ☒ TFIA ☐ HVP-3800AFC ☐ Basic-12 ☐ VSS-12

Serial No.: 21604 P Cal. Due Date: 7-20-02

MEDIA DESCRIPTION

Filter Media: ☒ ~~What~~-41 – 4 inch ☐ MF ☐ What-41 – 8x10 inch ☐ AA

NOTE: 1 CFM = 28.32 LPM

Start Date	Start Time	Start Flow (CFM) / LPM	Stop Date	Stop Time	Stop Flow (CFM) / LPM	Flow Duration (Minutes) †	Average Flow Rate (LPM)	Total Air Volume (L)
7-30-01	1715	17	7-30-01	1745	17	30	481.44	14443.2

Area Posted as ARA?	Were Respirators Worn?	Respirator Type and Protection Factor? ☒ N/A	
☐ Yes ☒ No	☐ Yes ☒ No	☐ APR (50) ☐ SCBA (10000)	☐ PAPR or Supplied Air Hood (1000) ☐ Airline or Supplied Air Full Face (2000)

Lapel Worn By: na

Badge Number: na

LABORATORY INFORMATION LAB RCT NAME Tiffany VanCleve SIGNATURE Tiffany VanCleve BADGE 704645

INSTRUMENTATION USED	Serial #:	Cal Due Date:	Alpha Efficiency	Beta Efficiency
☒ Tennelec (Series 2) / Series 5 ☐ Ludlum 2929 ☐ Berthold LB770	68676	12-21-01	0.23	0.29
☒ Tennelec (Series 2) / Series 5 ☐ Ludlum 2929 ☐ Berthold LB770	68676	12-21-01	0.23	0.29

ANALYSIS INFORMATION

DATE	TIME	Type	Bkg. Time (Minutes)	Counter Lc (DPM)	Counter MDA (DPM)	Sample Count Time (Minutes)	Gross Sample (CPM)	Bkg. (CPM)	Net Sample (CPM)	Net Sample (DPM) ††	Error 2σ (DPM)
8/6/01	8:35	Alpha	30	0.38	1.36	20	0.45	0.03	0.42	1.84	1.36
		Beta	30	1.61	3.69	20	2.27	0.93	1.34	4.61	2.66
DATE	TIME	Type	Bkg.Time (Minutes)	Counter Lc (DPM)	Counter MDA (DPM)	Sample Count Time (Minutes)	Gross Sample (CPM)	Bkg. (CPM)	Net Sample (CPM)	Net Sample (DPM) ††	Error 2σ (DPM)
8-9-01	1:01	Alpha	30	0.38	1.36	20	0.10	0.03	0.07	0.29	0.69
		Beta	30	1.74	3.96	20	1.91	1.10	0.81	2.80	2.54

ANALYSIS RESULTS CALCULATED BY: NAME Julie Woods SIGNATURE Julie Woods BADGE 703511

Alpha DAC (µCi/ml)	Posting Level (µCi/ml)	Concentration (µCi/ml)	Concentration (% DAC) †††
$2E^{-12}$	$5E^{-13}$	$2.97E^{-13}$ / $4.69E^{-14}$	14.9 / < MDC
Beta DAC (µCi/ml)	**Posting Level (µCi/ml)**	**Concentration (µCi/ml)**	**Concentration (% DAC) †††**
6 E-08	1.5 E-08	$5.22E^{-13}$ / $3.17E^{-13}$	$8.69E^{-4}$ / < MDC

† ☐ (Lapels Only) Sample did not run for minimum time of 120 minutes. Detector MDA @ this run time may exceed 10% of DAC.

Alpha MDC (µCi/ml) = $2.20E^{-13}$ **Beta MDC** (µCi/ml) = $4.18E^{-13}$ / $4.48E^{-13}$

†† Send samples > 100 DPM Alpha to the laboratory for isotopic analysis.

††† Notify Operations Support Manager or designee when 10% of DAC is exceeded.

COPY

* ☐ See Air Sample Calculation Worksheet Continuation Form.

Reviewed By: WC Hodge Date: 8-13-01 Data Entry KR 8-14

PAD/RCO-037 Rev. 10 (07/01)

1A

SEC RadCon Alliance - Paducah

Survey Number 01-ER-1104-A

Smear and Air Sample Activity Report

8/6/01

Batch ID:	20 Minute Air Samples - 200108060814	Acquisition Date:	8/6/01
Group ID:	A Device Serial Number: 68676	Acquisition Time: (minutes)	20.0
Device Name:	Tennelec Series 2		
Selected Geometry:	Swipe/Smear 12-21-01	Operating Voltage: (volts)	1,485.0

Efficiency Factors			Daily 30 Minute Background CPM		Batch Critical Level DPM	
Alpha Efficiency -	0.23	± 0.00	Alpha Background (CPM) -	0.03	Alpha Lc -	0.38
Beta Efficiency -	0.29	± 0.01	Beta Background (CPM) -	0.93	Beta Lc -	1.61

Sample ID	Quantity	Alpha DPM (DPM)	2σ	Alpha MDA (DPM)	Beta DPM (DPM)	2σ	Beta MDA (DPM)
20010806081426-A1	0.00	**1.84**	1.36	1.36	**4.61**	2.66	**3.69**

#1

COPY

Count Room Review: Kis Whitley

Sampling Tech Review: N/A

HI VOLS AIR SAMPLE CALCULATIONS

Survey Number	01-ER-1104-A
Start Date/Time	7/30/01 17:15
End Date/Time	7/30/01 17:45
	1/0/00 0:30

Days Elapsed	0	0
Hours Elapsed	0	0
Minutes Elapsed	30	30
Total Minutes		30

Start Flow CFM	17
Stop Flow CFM	17
Average Flow	481.44
Total Volume Air (L)	14,443.20

Activity in dpm-Alpha	1.84
Activity in dpm-Beta	4.61
Volume in L	14,443.20
Volume in mL	14,443,200.00
Alpha Activity by 4.74E-7	8.7216E-07
arV (.7)(.29)(Volume in mL)	2931969.60
Beta Activity by 4.74E-7	2.18514E-06
arV (1)(.29)(Volume in mL)	4188528.00

Alpha Concentration in microCi/mL	2.97E-13
% 2e-12 (Based on Np-237)	1.49E+01
% 2e-11	1.49E+00
% 8e-11	3.72E-01
For a Different Percent DAC Enter DAC Value Below	
1.00E-11	2.97E+00
Beta Concentration in microCi/mL	5.22E-13
% 6E-8 (Based on TH-234)	8.69E-04
For a Different Percent DAC Enter DAC Value Below	
6.00E-08	8.69E-04

Use This for Calculating Minimum Detectible Concentration in MicroCi/mL

Enter Alpha MDA	1.36	Enter Beta MDA	3.69
Alpha MDA*4.74E-7	6.4464E-07	Beta	
arV (.7)(.29)(Vol. In mL)	2931969.6	arV (1)(.29)(Vol In mL)	4188528
Alpha MDC in microCi/ml	2.20E-13	MDC in microCi/ml	4.18E-13

NOTES:

DATA TO BE ENTERED GOES IN

RESULTS ARE LAYED I

Printed name: Julie Woods

Signature/Date: Julie Woods 8/8/01

COPY

SEC RadCon Alliance - Paducah

recount

pay 4 01

1:21:19P

Survey Number 01-ER-1104-A

Smear and Air Sample Activity Report

8/9/01

Cal due 12-21-01

Batch ID:	20 Minute Air Samples - 200108091300	Acquisition Date:	8/9/01
Group ID:	A Device Serial Number: 68676	Acquisition Time: (minutes)	20.0
Device Name:	Tennelec Series 2		
Selected Geometry:	Swipe/Smear	Operating Voltage: (volts)	1,485.0

12-21-01

Efficiency Factors			Daily 30 Minute Background CPM		Batch Critical Level DPM	
Alpha Efficiency -	0.23	± 0.00	Alpha Background (CPM) -	0.03	Alpha Lc -	0.38
Beta Efficiency -	0.29	± 0.01	Beta Background (CPM) -	1.10	Beta Lc -	1.74

Sample ID	Quantity	Alpha DPM (DPM)	2σ	Alpha MDA (DPM)	Beta DPM (DPM)	2σ	Beta MDA (DPM)
20010809130037-A1	0.00	***0.29***	0.69	1.36	**2.80**	2.54	3.96

RECOUNT

COPY

Count Room Review: [signature]

Sampling Tech Review: N/A

HI VOLS AIR SAMPLE CALCULATIONS

Survey Number	01-ER-1104-A
Start Date/Time	7/30/01 17:15
End Date/Time	7/30/01 17:45
	1/0/00 0:30

Days Elapsed	0	0
Hours Elapsed	0	0
Minutes Elapsed	30	30
Total Minutes		30

Start Flow CFM	17
Stop Flow CFM	17
Average Flow	481.44
Total Volume Air (L)	14,443.20

Activity in dpm-Alpha	0.291
Activity in dpm-Beta	2.80
Volume in L	14,443.20
Volume in mL	14,443,200.00
Alpha Activity by 4.74E-7	13746E-07
arV (.7)(.29)(Volume in mL)	2931969.60
Beta Activity by 4.74E-7	1.3272E-06
arV (1)(.29)(Volume in mL)	4188528.00

Alpha Concentration in microCi/mL	4.69E-14
% 2e-12 (Based on Np-237)	2.34E+00
% 2e-11	2.34E-01
% 8e-11	5.86E-02
For a Different Percent DAC Enter DAC Value Below	
1.00E-11	4.69E-01
Beta Concentration in microCi/mL	3.17E-13
% 6E-8 (Based on TH-234)	5.28E-04
For a Different Percent DAC Enter DAC Value Below	
6.00E-08	5.28E-04

Use This for Calculating Minimum Detectible Concentration in MicroCi/mL

Enter Alpha MDA	1.36
Alpha MDA*4.74E-7	6.4464E-07
arV (.7)(.29)(Vol. In mL)	2931969.6
Alpha MDC in microCi/mL	2.20E-13

Enter Beta MDA	3.96
Beta MDA*4.74E-7	1.87704E-06
arV (1)(.29)(Vol. In mL)	4188528
Beta MDC in microCi/mL	4.48E-13

NOTES:

DATA TO BE ENTERED GOES IN

RESULTS ARE DISPLAYED IN

Printed Name: Julie Woods	
Signature/Date: Julie Woods	8/10/01

COPY

AIR SAMPLE CALCULATION WORKSHEET

~~RECORD COPY~~ KLF 9/8/01 PAGE 1 OF 2 Jul 818

SURVEY INFORMATION SAMPLING RCT NAME M Garcia SIGNATURE M Garcia BADGE 705008

Purpose of Survey: Job Coverage/ General Area - Low Vol. High Vol. Lapel Environmental Other:

Project-Building/Location: DMSA - C331-09 Work Description: Tapping Mat'l inside CA

Survey #: 01- ER - 1105 -A RWP #: 01-DOE- 48 - S

SAMPLING INSTRUMENTATION

Model: ☐HD-29A ☐AVS-28A ☐ MRV-1023CV ☐ BuckHF ☑ BuckIH ☐ SKC BZA ☐ TFIA ☐ HVP-3800AFC ☐ Basic-12 ☐ VSS-12

Serial No.: 1845 Cal. Due Date: 8-11-01

MEDIA DESCRIPTION

Filter Media: ☐ What-41 – 4 inch ☑ MF ☐ What-41 – 8x10 inch ☐ AA

NOTE: 1 CFM = 28.32 LPM

COPY

Start Date	Start Time	Start Flow CFM/LPM	Stop Date	Stop Time	Stop Flow CFM/LPM	Flow Duration (Minutes) †	Average Flow Rate (LPM)	Total Air Volume (L)
07-30-01	1710	4.855	7-30-01	~~4.500~~ 1745 7-30-01	4.500	35	4.678	163.73

Area Posted as ARA? ☐ Yes ☑ No

Were Respirators Worn? ☐ Yes ☑ No

Respirator Type and Protection Factor? ☑ N/A ☐ APR (50) ☐ SCBA (10000) ☐ PAPR or Supplied Air Hood (1000) ☐ Airline or Supplied Air Full Face (2000)

Lapel Worn By: D. Beach

Badge Number: 032222

Van

INSTRUMENTATION USED	Serial #:	Cal Due Date:	Alpha Efficiency	Beta Efficiency
☑ Ludlum 2929 ☐ Tennelec Series 2 / Series 5 ☐ Berthoid LB770	137627	3-8-02	.3658	.3281
	Serial #: N/A			

ANALYSIS INFORMATION

DATE	TIME	Type	Bkg. Time (Minutes)	Counter Lc (DPM)	Counter MDA (DPM)	Sample Count Time (Minutes)	Gross Sample (CPM)	Bkg. (CPM)	Net Sample (CPM)	Net Sample (DPM) ††	Error 2 σ (DPM)
8/6/01	0700						0.21	0.18	0.03	0.08	0.18
		Beta	4			300	47.71	46.63	1.08	3.29	3.09
					Counter MDA (DPM)	Sample Count Time (Minutes)	Gross Sample (CPM)	Bkg. (CPM)	Net Sample (CPM)	Net Sample (DPM) ††	Error 2 σ (DPM)
N/A		Alpha									
		Beta									

ANALYSIS RESULTS CALCULATED BY: NAME Julie Woods SIGNATURE Julie Woods BADGE 703511

Alpha DAC (µCi/ml)	Posting Level (µCi/ml)	Concentration (µCi/ml)	Concentration (% DAC) †††
2E-12	5E-13	3.31E-13	
Beta DAC (µCi/ml)	**Posting Level (µCi/ml)**	**Concentration (µCi/ml)**	**Concentration (% DAC) †††**
6E-08	**1.5 E-08**	9.53E-12	<MDC

† ~~X~~

Alpha MDC (µCi/ml) = 1.24E-12 **Beta MDC** (µCi/ml) = 1.47E-11

†† **Send samples > 100 DPM Alpha to the laboratory for isotopic analysis.**

††† **Notify Operations Support Manager or designee when 10% of DAC is exceeded.** L2

Reviewed By: WC Hoda Date: 8-10-01 Data Entry KD 8 14

PAD/RCO-037 Rev 10 (07101)

LOW VOLS/LAPEL BZA AIR SAMPLE CALCULATIONS

Survey Number	01-ER-1105-A
Start Date/Time	7/30/01 17:10
End Date/Time	7/30/01 17:45
	1/0/00 0:35

Days Elapsed	0	0
Hours Elapsed	0	0
Minutes Elapsed	35	35
Total Minutes		35

Start Flow LPM	4.855
Stop Flow LPM	4.5
Average Flow	4.68
Total Volume Air (L)	163.71

Activity in dpm-Alpha	0.08
Activity in dpm-Beta	3.29
Volume in L	163.71
Volume in mL	163712.50
Alpha Activity by 4.74E-7	3.792E-08
arV (.7)(1)(Volume in mL)	114598.75
Beta Activity by 4.74E-7	1.55946E-06
arV (1)(1)(Volume in mL)	163712.5

Alpha Concentration in microCi/mL	3.31E-13
% 2e-12 (Based on Np-237)	1.65E+01
% 2e-11	1.65E+00
% 8e-11	4.14E-01
For a Different Percent DAC Enter DAC Value Below	
1.00E-11	3.31E+00
Beta Concentration in microCi/mL	9.53E-12
% 6E-8 (Based on Th-234)	1.59E-02
For a Different Percent DAC Enter DAC Value Below	
6.00E-08	1.59E-02

Use This for Calculating Minimum Detectible Concentration in MicroCi/mL

Enter Alpha MDA	0.3	Enter Beta MDA	5.07
Alpha MDA*4.74E-7	1.422E-07	Beta MDA*4.74E-7	2.40318E-06
arV (.7)(1)(Vol. In mL)	114598.75	arV (1)(1)(Vol. In mL)	163712.5
Alpha MDC in microCi/mL	1.24E-12	Beta MDC in microCi/mL	1.47E-11

Use This For Calculating +/- 2 Sigma on Air Samples Counted on 2929's

	ALPHA		BETA
Gr Sample Count Rate,cpm	0.21	Gr Sample Count Rate,cpm	47.71
Gr Sample Count Time,min	300	Gr Sample Count Time,min	300
Bkgr. Count Rate, cpm	0.18	Bkgr. Count Rate, cpm	46.63
Bkgr Count Time, min.	480	Bkgr Count Time, min.	480
Counter Efficiency %	0.3658	Counter Efficiency %	0.3281
+/- 2 Sigma, dpm	0.18	+/- 2 Sigma, dpm	3.09

NOTES:

DATA TO BE ENTERED GOES IN

RESULTS ARE DISPLAYED IN

Printed Name: Julie Woods

Signature & Date: Julie Woods 8/8/01

COPY

RECORD COPY eKLR 9/8/09

AIR SAMPLE CALCULATION WORKSHEET

PAGE 1 OF 3

SURVEY INFORMATION SAMPLING RCT NAME Renee Balkey SIGNATURE Renee Balkey BADGE 703556

Purpose of Survey: Job Coverage/ General Area - Low Vol. High Vol. Lapel Environmental Other:

Project-Building/Location: C-331 DMSA-09 Work Description: Tagging material inside area

Survey #: 01- ER - 1176 -A RWP #: 01-DOE- 48 - S

SAMPLING INSTRUMENTATION

Model: ☐HD-29A ☐AVS-28A ☐MRV-1023CV ☐BuckHF ☐BuckIH ☐SKC BZA ☑TFIA ☐HVP-3800AFC ☐Basic-I2 ☐VSS-12

Serial No.: 21604P Cal. Due Date: 7/20/02

MEDIA DESCRIPTION

Filter Media: ☑What-41 – 4 inch ☐MF ☐What-41 – 8x10 inch ☐AA

NOTE: 1 CFM = 28.32 LPM

Start Date	Start Time	Start Flow CFM	Stop Date	Stop Time	Stop Flow CFM / LPM	Flow Duration (Minutes) †	Average Flow Rate (LPM)	Total Air Volume (L)
8/7/01	1245	481.44	8/7/01	1315	481.44	30	481.44	14443.2

Area Posted as ARA? ☐ Yes ☑ No

Were Respirators Worn? ☐ Yes ☑ No

Respirator Type and Protection Factor? ☑ N/A ☐ APR (50) ☐ PAPR or Supplied Air Hood (1000) ☐ SCBA (10000) ☐ Airline or Supplied Air Full Face (2000)

Lapel Worn By:

Badge Number: N/A

INSTRUMENTATION USED	Serial #:	Cal Due Date:	Alpha Efficiency	Beta Efficiency
☑Tennelec Series 2 / Series 5 ☐ Ludlum 2929 ☐ Berthold LB770	68676	12-21-01	0.23	0.25
INSTRUMENTATION USED	Serial #:	Cal Due Date:	Alpha Efficiency	Beta Efficiency
☐Tennelec Series 2 / Series 5 ☐ Ludlum 2929 ☐ Berthold LB770	N/A			

DATE	TIME	Type	Bkg. Time (Minutes)	Counter Lc (DPM)	Counter MDA (DPM)	Sample Count Time (Minutes)	Gross Sample (CPM)	Bkg. (CPM)	Net Sample (CPM)	Net Sample (DPM) ††	Error 2σ (DPM)
8/13/01	1343	Alpha	30	0.94	2.48	20	0.32	0.20	0.12	0.44	1.30
		Beta	30	1.42	3.32	20	1.86	0.73	1.13	3.91	2.40
DATE	TIME	Type	Bkg. Time (Minutes)	Counter Lc (DPM)	Counter MDA (DPM)	Sample Count Time (Minutes)	Gross Sample (CPM)	Bkg. (CPM)	Net Sample (CPM)	Net Sample (DPM) ††	Error 2 a (DPM)
N/A		Alpha									
		Beta									

		7 12.7	
		Concentration (µCi/ml)	Concentration (% DAC) †††
		~~1.50E-14~~ 4.42E-13	~~2.60E-05~~ 7.37E-04

† ☐ (Lapels Only) Sample did not run for minimum time of 120 minutes. Detector MDA @ this run time may exceed 10% of DAC.

Alpha MDC (µCi/ml) = ~~1.42E-14~~ 4.01E-13 Beta MDC (µCi/ml) = ~~1.33E-14~~ 3.76E-13

†† Send samples > 100 DPM Alpha to the laboratory for isotopic analysis.

††† Notify Operations Support Manager or designee when 10% of DAC is exceeded.

* ☐ See Air Sample Calculation Worksheet Continuation Form.

COPY

Reviewed By: WC Hooks Date: 8-17-01 Data Entry KP 9-6

PAD/RCO-037 Rev. 10 (07/01)

C

SEC RadCon Alliance - Paducah 3:19:50P

Survey Number 01-ER-1176A

Smear and Air Sample Activity Report

8/13/01

Batch ID:	20 Minute Air Samples - 200108131323	Acquisition Date:	8/13/01
Group ID:	C Device Serial Number: 68676	Acquisition Time: (minutes)	20.0
Device Name:	Tennelec Series 2		
Selected Geometry:	Swipe/Smear	Operating Voltage: (volts)	1,485.0

Efficiency Factors			Daily 30 Minute Background CPM		Batch Critical Level DPM	
Alpha Efficiency -	0.23	± 0.00	Alpha Background (CPM) -	0.20	Alpha Lc -	0.94
Beta Efficiency -	0.29	± 0.01	Beta Background (CPM) -	0.73	Beta Lc -	1.42

Sample ID	Quantity	Alpha DPM (DPM)	2σ	Alpha MDA (DPM)	Beta DPM (DPM)	2σ	Beta MDA (DPM)
200108**13**132503-C41	0.00	**0.44**	1.30	2.48	**3.91**	2.40	3.32

COPY

Count Room Review: Sampling Tech Review: N/A

HI VOLS AIR SAMPLE CALCULATIONS

Survey Number	01-ER-1176-A
Start Date/Time	8/7/01 12:45
End Date/Time	8/7/01 13:15
	1/0/00 0:30

Days Elapsed		0
Hours Elapsed		0
Minutes Elapsed	30	30
Total Minutes		30

Start Flow CFM	17
Stop Flow CFM	17
Average Flow	481.44
Total Volume Air (L)	14,443.20

Activity in dpm-Alpha	0.44
Activity in dpm-Beta	3.91
Volume in L	14,443.20
Volume in mL	14,443,200.00

Alpha Activity by 4.74E-7	2.0856E-07
arV (.7)(.29)(Volume in mL)	2931969.60

Beta Activity by 4.74E-7	1.85334E-06
arV (1)(.29)(Volume in mL)	4188528.00

Alpha Concentration in microCi/mL	7.11E-14
% 2e-12 (Based on Np-237)	3.56E+00
% 1e-10 (Drum Mountain)	7.11E-02
% 1.1E-11 (Tc-99 Tank)	6.47E-01
For a Different Percent DAC Enter DAC Value Below	
2.00E-12	3.56E+00

Beta Concentration in microCi/mL	4.42E-13
% 6E-8 (Based on TH-234)	7.37E-04
For a Different Percent DAC Enter DAC Value Below	
6.00E-08	7.37E-04

Use This for Calculating Minimum Detectible Concentration in MicroCi/mL

Enter Alpha MDA	2.48
Alpha MDA*4.74E-7	1.17552E-06
arV (.7)(.29)(Vol. In mL)	2931969.6
Alpha MDC in microCi/mL	4.01E-13

Enter Beta MDA	3.32
Beta MDA*4.74E-7	1.57368E-06
arV (1)(.29)(Vol. In mL)	4188528
Beta MDC in microCi/mL	3.76E-13

NOTES.

Data to be entered goes in	
Results are displayed in	

Printed Name:	Angel Roberts
Signature/Date:	Angel Roberts 8/17/01

COPY

AIR SAMPLE CALCULATION WORKSHEET

RECORD COPY e KLR 9/8/01 PAGE 1 OF 3

SURVEY INFORMATION SAMPLING RCT NAME John Gaw SIGNATURE John Gaw BADGE 635941

Purpose of Survey: Job Coverage/ General Area - Low Vol. High Vol. Lapel Environmental Other:

Project-Building/Location: C-331 DMSA-09 Work Description: Tagging items in DMSA

Survey #: 01- ER - 1179 -A RWP #: 01-DOE- 48 - 5

SAMPLING INSTRUMENTATION

Model: ☐HD-29A ☐AVS-28A ☐ MRV-1023CV ☐ BuckHF ☑BuckIH ☐ SKC BZA ☐ TFIA ☐ HVP-3800AFC ☐ Basic-12 ☐ VSS-12

Serial No.: 29242 Cal. Due Date: 8/11/01

MEDIA DESCRIPTION

Filter Media: ☐ What-41 – 4 inch ☑ MF ☐ What-41 – 8x10 inch ☐ AA

NOTE: 1 CFM = 28.32 LPM

Start Date	Start Time	Start Flow CFM / LPM	Stop Date	Stop Time	Stop Flow CFM / LPM	Flow Duration (Minutes) †	Average Flow Rate (LPM)	Total Air Volume (L)
*	*	*	*	*	*	*	*	*

☐ Yes ☑ No | ☐ Yes ☑ No | ☐ APR (50) ☐ SCBA (10000) ☐ PAPR or Supplied Air Hood (1000) ☐ Airline or Supplied Air Full Face (2000)

Lapel Worn By: *

Badge Number: *

INSTRUMENTATION USED	Serial #:	Cal Due Date:	Alpha Efficiency	Beta Efficiency
☑ Ludlum 2929 ☐ Tennelec Series 2 / Series 5 ☐ Berthold LB770	VBS 126134	~~3-21-02~~ ~~2-22-02~~ KWB 1-9-01	~~.365~~ KWB 5-14-01	.3732
INSTRUMENTATION USED ☐ Ludlum 2929 ☐ Tennelec Series 2 / Series 5 ☐ Berthold LB770	Serial #: N/A	Cal Due Date:	Alpha Efficiency	Beta Efficiency

DATE	TIME	Type	Bkg. Time (Minutes)	Counter Lc (DPM)	Counter MDA (DPM)	Sample Count Time (Minutes)	Gross Sample (CPM)	Bkg. (CPM)	Net Sample (CPM)	Net Sample (DPM) ††	Error 2σ (DPM)
8-13-01	0520	Alpha	480	0.18	0.39	300	0.32	0.27	0.05	0.14	0.23
		Beta	480	2.41	4.85	300	56.61	55.40	1.21	3.24	2.96
DATE	TIME	Type	Bkg. Time (Minutes)	Counter Lc (DPM)	Counter MDA (DPM)	Sample Count Time (Minutes)	Gross Sample (CPM)	Bkg. (CPM)	Net Sample (CPM)	Net Sample (DPM) ††	Error 2σ (DPM)
N/A		Alpha									
		Beta									

ANALYSIS RESULTS CALCULATED BY: NAME Julie Woods SIGNATURE Julie Woods BADGE 703511

Alpha DAC (µCi/ml)	Posting Level (µCi/ml)	Concentration (µCi/ml)	Concentration (% DAC) †††
2E-12	5E-13	3.63E-13	<MDC
Beta DAC (µCi/ml)	**Posting Level (µCi/ml)**	**Concentration (µCi/ml)**	**Concentration (% DAC) †††**
6 E-08	1.5 E-08	5.89E-12	<MDC

† ☑ **(Lapels Only) Sample did not run for minimum time of 120 minutes. Detector MDA @ this run time may exceed 10% of DAC.**

Alpha MDC (µCi/ml) = 1.01E-12 **Beta MDC** (µCi/ml) = 8.81E-12

†† **Send samples > 100 DPM Alpha to the laboratory for isotopic analysis.**

††† **Notify Operations Support Manager or designee when 10% of DAC is exceeded.**

COPY

* ☑ See Air Sample Calculation Worksheet Continuation Form.

COUNTS X 95 BY 16984

Reviewed By: W C Hooler **Date:** 8-17-01 **Data Entry** KLR 8-17

PAD/RCO-037 Rev. 10 (07/01)

AIR SAMPLE CALCULATION WORKSHEET

CONTINUATION FORM

Air Sample # 01 - ER - 1179 - A RWP # 01 - DOE - 48 - S

Lapel User	Badge / SSN#	Date On	Time On	Start Flow LPM	Date Off	Time Off	Stop Flow LPM	Flow Duration (minutes)	Average Flow Rate LPM	Sample Volume (L)
Dale Beach	~~32222~~	08/07/01	1248	~~4.593~~	08/07/01	~~1323~~	~~4.372~~	35	4.4825	156.888
Dottie Jones	28124	8/7/01	1700	4.152	8/7/01	1725	4.167	25	4.1595	103.988
				N						
						A				
TOTALS										260.876

Comments:

N/A

John Gaw
Name

John Gaw
Signature

8/08/01
Date

COPY

PAD/RCO-037 Rev. 10 (07/01)

LOW VOLS/LAPEL BZA AIR SAMPLE CALCULATIONS

Survey Number	01-ER-1179-A
Start Date/Time	
End Date/Time	

Start Flow LPM	
Stop Flow LPM	
Average Flow	0.00
Total Volume Air (L)	260.88

Days Elapsed		0
Hours Elapsed		0
Minutes Elapsed		0
Total Minutes		0

Activity in dpm-Alpha	0.14
Activity in dpm-Beta	3.24
Volume in L	260.88
Volume in mL	260876.00
Alpha Activity by 4.74E-7	6.636E-08
arV (.7)(1)(Volume in mL)	182613.2
Beta Activity by 4.74E-7	1.53576E-06
arV (1)(1)(Volume in mL)	260876

Alpha Concentration in microCi/mL	3.63E-13
% 2e-12 (Based on Np-237)	1.82E+01
% 2e-11	1.82E+00
% 8e-11	4.54E-01
For a Different Percent DAC Enter DAC Value Below	
1.00E-11	3.63E+00
Beta Concentration in microCi/mL	5.89E-12
% 6E-8 (Based on Th-234)	9.81E-03
For a Different Percent DAC Enter DAC Value Below	
6.00E-08	9.81E-03

Use This for Calculating Minimum Detectible Concentration in MicroCi/mL

Enter Alpha MDA	0.39	Enter Beta MDA	4.85
Alpha MDA*4.74E-7	1.8486E-07	Beta MDA*4.74E-7	2.2989E-06
arV (.7)(1)(Vol. In mL)	182613.2	arV (1)(1)(Vol. In mL)	260876
Alpha MDC in microCi/mL	1.01E-12	Beta MDC in microCi/mL	8.81E-12

Use This For Calculating +/- 2 Sigma on Air Samples Counted on 2929's

	ALPHA		BETA
Gr Sample Count Rate,cpm	0.32	Gr Sample Count Rate,cpm	56.61
Gr Sample Count Time,min	300	Gr Sample Count Time,min	300
Bkgr. Count Rate, cpm	0.27	Bkgr. Count Rate, cpm	55.4
Bkgr Count Time, min.	480	Bkgr Count Time, min.	480
Counter Efficiency %	0.3478	Counter Efficiency %	0.3732
+/- 2 Sigma, dpm	0.23	+/- 2 Sigma, dpm	2.96

NOTES:

DATA TO BE ENTERED GOES IN

RESULTS ARE DISPLAYED IN

Printed Name: Julie Woods

Signature & Date: Julie Woods 8/14/01

COPY

AIR SAMPLE CALCULATION WORKSHEET

RECORD COPY 9/8/01

PAGE 1 OF 3

SURVEY INFORMATION SAMPLING RCT NAME Rod Curtis SIGNATURE BADGE 864802

Purpose of Survey: Job Coverage/ General Area - Low Vol. (High Vol.) Lapel Environmental Other:

Project-Building/Location: C-331-DMSA-9 Work Description: Inventory

Survey #: 01- ER - 1201 -A RWP #: 01-DOE- 48 -5

SAMPLING INSTRUMENTATION

Model: ☐HD-29A ☐AVS-28A ☐MRV-1023CV ☐BuckHF ☐BuckIH ☐SKC BZA ☒TFIA ☐HVP-3800AFC ☐Basic-I2 ☐VSS-12

Serial No.: 19913N Cal. Due Date: 8-7-02

MEDIA DESCRIPTION

Filter Media: ☒What-41 – 4 inch ☐What-41 – 8x10 inch ☐MF ☐AA

NOTE: 1 CFM = 28.32 LPM

Start Date	Start Time	Start Flow (CFM / LPM)	Stop Date	Stop Time	Stop Flow (CFM / LPM)	Flow Duration (Minutes) †	Average Flow Rate (LPM)	Total Air Volume (L)
8-9-01	1313	20	8-9-01	1343	20	30	566.4	16992

Area Posted as ARA?	Were Respirators Worn?	Respirator Type and Protection Factor?	
☐ Yes ☒ No	☐ Yes ☒ No	☐ APR (50) ☐ SCBA (10000) ☐ PAPR or Supplied Air Hood (1000) ☐ Airline or Supplied Air Full Face (2000) ☒ N/A	Lapel Worn By: NA Badge Number: NA

INSTRUMENTATION USED		Serial #:	Cal Due Date:	Alpha Efficiency	Beta Efficiency
☒ Tennelec Series 2 / Series 5	☐ Ludlum 2929 ☐ Berthold LB770	36643	12-6-01	0.27	0.40
INSTRUMENTATION USED		Serial #:	Cal Due Date:	Alpha Efficiency	Beta Efficiency
☐ Tennelec Series 2 / Series 5	☐ Ludlum 2929 ☐ Berthold LB770	N/A			

DATE	TIME	Type	Bkg. Time (Minutes)	Counter Lc (DPM)	Counter MDA (DPM)	Sample Count Time (Minutes)	Gross Sample (CPM)	Bkg. (CPM)	Net Sample (CPM)	Net Sample (DPM) ††	Error 2 σ (DPM)
8/20/01	0955	Alpha	30	1.36	3.22	20	0.10	0.27	-0.17	-0.63	1.51
		Beta	30	2.25	4.84	20	1.76	1.62	0.14	0.34	2.77
DATE	TIME	Type	Bkg. Time (Minutes)	Counter Lc (DPM)	Counter MDA (DPM)	Sample Count Time (Minutes)	Gross Sample (CPM)	Bkg. (CPM)	Net Sample (CPM)	Net Sample (DPM) ††	Error 2 a (DPM)
N/A		Alpha									
		Beta									

Alpha DAC (µCi/ml)	Posting Level (µCi/ml)	Concentration (µCi/ml)	Concentration (% DAC) †††
2E-12	5E-13	8.606 -14	<MDC
Beta DAC (µCi/ml)	**Posting Level (µCi/ml)**	**Concentration (µCi/ml)**	**Concentration (% DAC) †††**
6 E-08	1.5 E-08	3.27E-14	<MDC

† ☐ **(Lapels Only) Sample did not run for minimum time of 120 minutes. Detector MDA @ this run time may exceed 10% of DAC.**

-13 4

†† **Send samples > 100 DPM Alpha to the laboratory for isotopic analysis.**

††† **Notify Operations Support Manager or designee when 10% of DAC is exceeded.**

COPY

* ☐ **See Air Sample Calculation Worksheet Continuation Form.**

Reviewed By: Londa Skogen / [illegible] **Date:** 8-24-01 **Data Entry** KR 8-31

PAD/RCO-037 Rev. 10 (07/01)

SEC RadCon Alliance - Paducah

Smear and Air Sample Activity Report

8/20/01

Survey Number 01-EN-1201-A

Batch ID:	20 Minute Air Samples - 200108200955	Acquisition Date:	8/20/01
Group ID:	A	Device Serial Number:	36643
Acquisition Time: (minutes)	20.0		
Device Name:	Tennelec Series 5		
Selected Geometry:	Swipe/Smear	Operating Voltage: (volts)	1,387.0

Efficiency Factors				Daily 30 Minute Background CPM		Batch Critical Level DPM	
Alpha Efficiency -	0.27	±	0.00	Alpha Background (CPM) -	0.27	Alpha Lc -	1.36
Beta Efficiency -	0.40	±	0.01	Beta Background (CPM) -	1.62	Beta Lc -	2.25

Sample ID	Quantity	Alpha DPM (DPM)	2σ	Alpha MDA (DPM)	Beta DPM (DPM)	2σ	Beta MDA (DPM)
200 10820095543-A1	0.00	**-0.63**	1.51	3.22	**0.34**	2.77	**4.84**

COPY

Count Room Review: Kris Wheatley

Sampling Tech Review: N/A

HI VOLS AIR SAMPLE CALCULATIONS

Survey Number	01-ER-1201-A
Start Date/Time	8/9/01 13:13
End Date/Time	8/9/01 13:43
	1/0/00 0:30

Days Elapsed	0	0
Hours Elapsed	0	0
Minutes Elapsed	30	30
Total Minutes		30

Activity in dpm-Alpha	-0.63
Activity in dpm-Beta	0.34
Volume in L	16,992.00
Volume in mL	16,992,000.00
Alpha Activity by 4.74E-7	-2.9862E-07
arV (.7)(.29)(Volume in mL)	3449376.00
Beta Activity by 4.74E-7	1.6116E-07
arV (1)(.29)(Volume in mL)	4927680.00

Start Flow CFM	20
Stop Flow CFM	20
Average Flow	566.40
Total Volume Air (L)	16,992.00

Alpha Concentration in microCi/mL	-8.66E-14
% 2e-12 (Based on Np-237)	-4.33E+00
% 2e-11	-4.33E-01
% 8e-11	-1.08E-01
For a Different Percent DAC Enter DAC Value Below	
1.00E-11	-8.66E-01

Beta Concentration in microCi/mL	-3.27E-14
% 6E-8 (Based on TH-234)	-5.45E-05
For a Different Percent DAC Enter DAC Value Below	
6.00E-08	-5.45E-05

Use This for Calculating Minimum Detectible Concentration in MicroCi/mL

Enter Alpha MDA	3.22
Alpha MDA*4.74E-7	1.52628E-06
arV (.7)(.29)(Vol. In mL)	3449376
Alpha MDC in microCi/mL	4.42E-13

Enter Beta MDA	4.84
Beta MDA*4.74E-7	2.29416E-06
arV (1)(.29)(Vol. In mL)	4927680
Beta MDC in microCi/mL	4.66E-13

NOTES:

DATA TO BE ENTERED GOES IN

RESULTS ARE DISPLAYED IN

Printed Name: Julie Woods

Signature/Date: Julie Woods 8/21/01

COPY

AIR SAMPLE CALCULATION WORKSHEET

RECORD COPY KLK 9/8/01 PAGE 1 OF 2

SURVEY INFORMATION SAMPLING RCT NAME M. Foster SIGNATURE Mike Foster BADGE 618972

Purpose of Survey: (Job Coverage) General Area - Low Vol. High Vol. (Lapel) Environmental Other:

Project-Building/Location: C-331-DMSA-9 Work Description: Inventory

Survey.#: 01- ER - 1203 -A RWP #: 01-DOE- 48 - 5

SAMPLING INSTRUMENTATION

Model: OHD-29A ☐ AVS-28A ☐ MRV-1023CV ☐ BuckHF ☐ BuckIH ☐ SKC BZA ☐ TFIA ☐ HVP-3800AFC ☐ Basic-I2 ☑ VSS-12

Serial No.: V12029 Cal. Due Date: 8/25/01

MEDIA DESCRIPTION

Filter Media: ☐ What41 – 4 inch ☐ MF ☐ What41 – 8x10 inch ☑ AA

NOTE: 1 CFM = 28.32 LPM

Start Date	Start Time	Start Flow CFM (LPM)	Stop Date	Stop Time	Stop Flow CFM (LPM)	Flow Duration (Minutes) †	Average Flow Rate (LPM)	Total Air Volume (L)
8/9/01	1320	7.98	8/9/01	1335	7.96	15	7.97	119.55

Area Posted as ARA? ☐ Yes ☑ No

Were Respirators Worn? ☐ Yes ☑ No

Respirator Type and Protection Factor? ☑ N/A ☐ APR (50) ☐ PAPR or Supplied Air Hood (1000) ☐ SCBA (10000) ☐ Airline or Supplied Air Full Face (2000)

Badge Number: 704277

INSTRUMENTATION USED	Serial #:	Cal Due Date:	Alpha Efficiency	Beta Efficiency
☐ Tennelec Series 2 /Series 5 ☑ Ludlum 2929 ☐ Berthold LB770	137627	3-8-02	.3658	.3281
☐ Tennelec Series 2 / Series 5 ☐ Ludlum 2929 ☐ Berthold LB770	N/A			

DATE	TIME	Type	Bkg. Time (Minutes)	Counter Lc (DPM)	Counter MDA (DPM)	Sample Count Time (Minutes)	Gross Sample (CPM)	Bkg. (CPM)	Net Sample (CPM)	Net Sample (DPM) ††	Error 2σ (DPM)
81401	0520	Alpha	480	0.16	0.34	300	0.24	0.23	0.01	0.03	0.20
		Beta	480	2.52	5.07	3	45.68	46.61	-0.93	-2.84	3.04
DATE	TIME	Type	Bkg.Time (Minutes)	Counter Lc (DPM)	Counter MDA (DPM)	Sample Count Time (Minutes)	Gross Sample (CPM)	Bkg. (CPM)	Net Sample (CPM)	Net Sample (DPM) ††	Error 2 a (DPM)
N/A		Alpha									
		Beta									

SIGNATURE Angel Roberts

Alpha DAC (µCi/ml)	Posting Level (µCi/ml)	Concentration (µCi/ml)	Concentration (% DAC) †††
2E-12	5E-13	1.70E-13	~~8.50~~ <MDC
Beta DAC (µCi/ml)	Posting Level (µCi/ml)	Concentration (µCi/ml)	Concentration (% DAC) †††
6 E-08	1.5 E-08	-1.13E-11	~~1.88E-02~~ <MDC

† ~~X~~

Alpha MDC (µCi/ml) = 1.93E-12 Beta MDC (µCi/ml) = 2.01E-11

†† Send samples > 100 DPM Alpha to the laboratory for isotopic analysis.

††† Notify Operations Support Manager or designee when 10% of DAC is exceeded.

* ☐ See Air Sample Calculation Worksheet Continuation Form.

COPY

COUNTS & 71

BY 13704

Reviewed By: WC Hoods Date: 8-17-01 Data Entry KK 9-6

PAD/RCO-037 Rev. 10 (07101)

LOW VOLS/LAPEL BZA AIR SAMPLE CALCULATIONS

Survey Number	01-ER-1203-A
Start Date/Time	8/9/01 13:20
End Date/Time	8/9/01 13:35
	1/0/00 0:15

Start Flow LPM	7.98
Stop Flow LPM	7.96
Average Flow	7.97
Total Volume Air (L)	119.55

Days Elapsed	0	0
Hours Elapsed	0	0
Minutes Elapsed	15	15
Total Minutes		15

Activity in dpm-Alpha	0.03
Activity in dpm-Beta	-2.84
Volume in L	119.55
Volume in mL	119550.00

Alpha Concentration in microCi/mL	1.70E-13
% 2e-12 (Based on Np-237)	8.50E+00
% 2e-11	8.50E-01
% 8e-11	2.12E-01
For a Different Percent DAC Enter DAC Value Below	
1.00E-11	1.70E+00

Alpha Activity by 4.74E-7 arV (.7)(1)(Volume in mL)	1.422E-08 / 83685

Beta Activity by 4.74E-7 arV (1)(1)(Volume in mL)	-1.34616E-06 / 119550

Beta Concentration in microCi/mL	1.13E-11
% 6E-8 (Based on Th-234)	1.88E-02
For a Different Percent DAC Enter DAC Value Below	
6.00E-08	1.88E-02

Use This for Calculating Minimum Detectible Concentration in MicroCi/mL

Enter Alpha MDA	0.34	Enter Beta MDA	5.07
Alpha MDA*4.74E-7	1.6116E-07	Beta MDA*4.74E-7	2.40318E-06
arV (.7)(1)(Vol. In mL)	83685	arV (1)(1)(Vol. In mL)	119550
Alpha MDC in microCi/mL	1.93E-12	Beta MDC in microCi/mL	2.01E-11

Use This For Calculating +/- 2 Sigma on Air Samples Counted on 2929's

	ALPHA		BETA
Gr Sample Count Rate, cpm	0.24	Gr Sample Count Rate, cpm	45.68
Gr Sample Count Time, min	300	Gr Sample Count Time, min	300
Bkgr. Count Rate, cpm	0.23	Bkgr. Count Rate, cpm	46.61
Bkgr Count Time, min.	480	Bkgr Count Time, min.	480
Counter Efficiency %	0.3658	Counter Efficiency %	0.3281
+/- 2 Sigma, dpm	0.20	+/- 2 Sigma, dpm	3.04

NOTES:

Data to be entered goes in

Results are displayed in

Printed Name:	Angel Roberts
Signature & Date: Angel Roberts	8/15/01

COPY

AIR SAMPLE CALCULATION WORKSHEET

RECORD COPY KLR 9/8/01 PAGE 1 OF 3

SURVEY INFORMATION SAMPLING RCT NAME M. Foster SIGNATURE M. Foster BADGE 618972

rea - Low Vol.

48

SAMPLING INSTRUMENTATION

Model: OHD-29A ☐ AVS-28A ☑ MRV-1023CV ☐ BuckHF ☐ BuckIH ☐ SKC BZA ☐ TFIA ☐ HVP-3800AFC ☐ Basic-12 ☐ VSS-12

Serial No.: 9324 Cal. Due Date: 7/18/02

MEDIA DESCRIPTION

Filter Media: ☐ What-41 – 4 inch ☐ MF ○ What-41 – 8x10 inch ☑ AA

NOTE: 1 CFM = 28.32 LPM

Start Date	Start Time	Start Flow CFM / LPM	Stop Date	Stop Time	Stop Flow CFM / LPM	Flow Duration (Minutes) †	Average Flow Rate (LPM)	Total Air Volume (L)
8/7/01	0914	55	8/9/01	1330	50	3136	52.5	

Area Posted as ARA?	Were Respirators Worn?	Respirator Type and Protection Factor? ☑ N/A	
☐ Yes ☑ No	☐ Yes ☑ No	☐ APR (50) ○ SCBA (10000) ○ PAPR or Supplied Air Hood (1000) ○ Airline or Supplied Air Full Face (2000)	Lapel Worn By: N/A Badge Number: N/A

1

LABORATORY INFORMATION LAB RCT NAME Kris Westlake SIGNATURE Kris Westlake BADGE 704646

INSTRUMENTATION USED	Serial #:	Cal Due Date:	Alpha Efficiency	Beta Efficiency
☑ Tennelec Series 2 / ~~Series 5~~ ☐ Ludlum 2929 ☐ Berthold LB770	36643	12-6-01	0.27	0.40
INSTRUMENTATION USED ☐ Tennelec Series 2 / Series 5 ○ Ludlum 2929 ☐ Berthold LB770	N/A			

DATE	TIME	Type	Bkg. Time (Minutes)	Counter Lc (DPM)	Counter MDA (DPM)	Sample Count Time (Minutes)	Gross Sample (CPM)	Bkg. (CPM)	Net Sample (CPM)	Net Sample (DPM) ††	Error 2σ (DPM)
8/13/01	1302	Alpha	30	0.32	1.15	20	0.40	0.03	0.37	1.36	1.08
		Beta	30	1.49	3.32	20	6.07	1.57	4.50	11.24	3.00
DATE	TIME	Type	Bkg. Time (Minutes)	Counter Lc (DPM)	Counter MDA (DPM)	Sample Count Time (Minutes)	Gross Sample (CPM)	Bkg. (CPM)	Net Sample (CPM)	Net Sample (DPM) ††	Error 2σ (DPM)
N/A		Alpha									
		Beta									

ANALYSIS RESULTS CALCULATED BY: NAME Angel Roberts SIGNATURE Angel Roberts BADGE 722290

Alpha DAC (µCi/ml)	Posting Level (µCi/ml)	Concentration (µCi/ml)	Concentration (% DAC) †††
2E-12	5E-13	5.61E-15	2.81E-01
Beta DAC (µCi/ml)	**Posting Level (µCi/ml)**	**Concentration (µCi/ml)**	**Concentration (% DAC) †††**
6 E-08	1.5 E-08	3.25E-14	5.41E-05

Alpha MDC (µCi/ml) = 4.74E-15 **Beta MDC** (µCi/ml) = 9.59E-15

†† **Send samples > 100 DPM Alpha to the laboratory for isotopic analysis.**

††† **Notify Operations Support Manager or designee when 10% of DAC is exceeded.**

COPY

* ☐ See Air Sample Calculation Worksheet Continuation Form.

Reviewed By: WC Hedg **Date:** 8-17-01 **Data Entry** KL 8-31

PAD/RCO-037 Rev. 10 (07101)

G

SEC RadCon Alliance - Paducah

3:06:13P

Survey Number

Smear and Air Sample Activity Report

8/13/01

Batch ID:	20 Minute **Air** Samples - 200108131243	Acquisition Date:	8/13/01
Group **ID:**	G Device Serial Number: 36643	Acquisition Time: (minutes)	20.0
Device Name:	Tennelec Series 5		
Selected Geometry:	Swipe/Smear	Operating Voltage: **(volts)**	1,387.0

Efficiency Factors			Daily 30 Minute Background CPM		Batch Critical Level DPM	
Alpha Efficiency -	0.27	± 0.00	Alpha Background (CPM) -	0.03	Alpha Lc -	0.32
Beta Efficiency -	0.40	± 0.01	Beta Background (CPM) -	1.57	Beta Lc -	1.49

Sample ID	Quantity	Alpha DPM **(DPM)**	2σ	Alpha MDA **(DPM)**	Beta DPM **(DPM)**	2σ	Beta MDA **(DPM)**
200108I3124304-G7	0.00	**1.36**	1.08	1.15	**11.24**	3.00	3.32

COPY

Count Room Review: Sampling Tech Review: N/A

LOW VOLS/LAPEL BZA AIR SAMPLE CALCULATIONS

Survey Number	01-ER-1204-A
Start Date/Time	8/7/01 9:14
End Date/Time	8/9/01 13:20
	1/2/00 4:06

Days Elapsed	2	1.2880
Hours Elapsed	4	240
Minutes Elapsed	6	6
Total Minutes		3126

Start Flow LPM	55
Stop Flow LPM	50
Average Flow	52.50
Total Volume Air (L)	164115.00

Activity in dpm-Alpha	1.36
Activity in dpm-Beta	11.24
Volume in L	164115.00
Volume in mL	164115000.00

Alpha Activity by 4.74E-7 arV (.7)(1)(Volume in mL)	6.4464E-07 / 114880500

Beta Activity by 4.74E-7 arV (1)(1)(Volume in mL)	5.32776E-06 / 164115000

Alpha Concentration in microCi/mL	5.61E-15
% 2e-12 (Based on Np-237)	2.81E-01
% 2e-11	2.81E-02
% 8e-11	7.01E-03
For a Different Percent DAC Enter DAC Value Below	
1.00E-11	5.61E-02

Beta Concentration in microCi/mL	3.25E-14
% 6E-8 (Based on Th-234)	5.41E-05
For a Different Percent DAC Enter DAC Value Below	
6.00E-08	5.41E-05

Use This for Calculating Minimum Detectible Concentration in MicroCi/mL

Enter Alpha MDA	1.15
Alpha MDA*4.74E-7	5.451E-07
arV (.7)(1)(Vol. In mL)	114880500
Alpha MDC in microCi/mL	4.74E-15

Enter Beta MDA	3.32
Beta MDA*4.74E-7	1.57368E-06
arV (1)(1)(Vol. In mL)	164115000
Beta MDC in microCi/mL	9.59E-15

Use This For Calculating +/- 2 Sigma on Air Samples Counted on 2929's

	ALPHA
Gr Sample Count Rate,cpm	
Gr Sample Count Time,min	300
Bkgr. Count Rate, cpm	
Bkgr Count Time, min.	480
Counter Efficiency %	
+/- 2 Sigma, dpm	#DIV/0!

	BETA
Gr Sample Count Rate,cpm	
Gr Sample Count Time,min	300
Bkgr. Count Rate, cpm	
Bkgr Count Time, min.	480
Counter Efficiency %	
+/- 2 Sigma, dpm	#DIV/0!

NOTES:

Data to be entered goes in	
Results are displayed in	

Printed Name:	Angel Roberts
Signature & Date:	Angel Roberts 8/15/01

COPY

AIR SAMPLE CALCULATION WORKSHEET

RECORD COPY PAGE 9 OF 2

SURVEY INFORMATION SAMPLING RCT NAME M. Foster SIGNATURE Mike Foster BADGE 618977

Purpose of Survey: (Job Coverage) General Area - Low Vol. High Vol. (Lapel) Environmental Other:

SAMPLING INSTRUMENTATION

Model: ☐HD-29A ☐AVS-28A ☐ MRV-1023CV ☐ BuckHF ☐ BuckIH ☐ SKC BZA ☐ TFIA ☐ HVP-3800AFC ☐ Basic-12 ☑ VSS-12

V 2029

MEDIA DESCRIPTION

Filter Media: ☐ What41 – 4 inch ☐ MF ☐ What-41 – 8x10 inch ☑ AA

Star: Date	Start Time	Start Flow CFM / (LPM)	Stop Date	Stop Time	Stop Flow CFM / (LPM)	Flow Duration (Minutes) †	Average Flow Rate (LPM)	Total Air Volume (L)
8/9/01	1700	7	8/9/01	1730	7.96	30	7.975	239.25

Area Posted as ARA? ☐ Yes ☑ No

Were Respirators Worn? ☐ Yes ☑ No

Respirator Type and Protection Factor? ☑ N/A
☐ APR (50) ☐ PAPR or Supplied Air Hood (1000)
☐ SCBA (10000) ☐ Airline or Supplied Air Full Face (2000)

Lapel Worn By: L. Jones / B. Story
Badge Number: 16198 / 704277

INSTRUMENTATION USED		Serial #:	Cal Due Date:	Alpha Efficiency	Beta Efficiency
☐ Tennelec Series 2 / Series 5	☐ Ludlum 2929 ☐ Berthold LB770	137627	3-8-02	.3658	.3281
INSTRUMENTATION USED ☐ Tennelec Series 2 / Series 5	☐ Ludlum 2929 ☐ Berthold LB770	N/A	Cal Due Date:	Alpha Efficiency	Beta Efficiency

DATE	TIME	Type	Bkg. Time (Minutes)	Counter Lc (DPM)	Counter MDA (DPM)	Sample Count Time (Minutes)	Gross Sample (CPM)	Bkg. (CPM)	Net Sample (CPM)	Net Sample (DPM) ††	Error 2 a (DPM)
8-13-01	0520	Alpha	480	0.16	0.34	~~300~~ 500	0.19	0.23	-0.04	-0.11	0.18
		Beta	480	2.52	5.07	300	47.06	46.61	0.45	1.37	~~5.07~~ 3.0
DATE		Type	Bkg. Time (Minutes)	Counter Lc (DPM)	Counter MDA (DPM)	Sample Count Time (Minutes)	Gross Sample (CPM)	Bkg. (CPM)	Net (CPM)	Net Sample (DPM) ††	Error 2 a (DPM)
N/A		Alpha									
		Beta									

ANALYSIS RESULTS CALCULATED BY: NAME Angel Roberts SIGNATURE Angel Roberts

	Posting Level (µCi/ml)	Concentration (% DAC) †††
2E-12	5E-13	~~1.56E+01~~ <MDC
		Concentration (% DAC) ††† ~~4.52E-03~~ <MDC

† ☒ (Lapels Only) Sample did not run for minimum time of 120 minutes. Detector MDA @ this run time may exceed 10% of DAC.

Alpha MDC (µCi/ml) = 9.62E-13 Beta MDC (µCi/ml) = 1.00E-11

†† Send samples > 100 DPM Alpha to the laboratory for isotopic analysis.

††† Notify Operations Support Manager or designee when 10% of DAC is exceeded.

• ☐ See Air Sample Calculation Worksheet Continuation Form.

◇ B. Story relieved L. Jones because of temperture stay times. Buck pump ran continually.

COPY

Reviewed By: W C Hardy Date: 8-17-01 Data Entry KR 9-6

PAD/RCO-037 Rev. 10 (07101)

LOW VOLS/LAPEL BZA AIR SAMPLE CALCULATIONS

Survey Number	01-ER-1205-A
Start Date/Time	8/9/01 17:00
End Date/Time	8/9/01 17:30
	1/0/00 0:30

Start Flow LPM	7.99
Stop Flow LPM	7.96
Average Flow	7.98
Total Volume Air (L)	239.25

Days Elapsed	0	0
Hours Elapsed	0	0
Minutes Elapsed	30	30
Total Minutes		30

Activity in dpm-Alpha	-0.11
Activity in dpm-Beta	1.37
Volume in L	239.25
Volume in mL	239250.00

Alpha Concentration in microCi/mL	-3.11E-13
% 2e-12 (Based on Np-237)	-1.56E+01
% 2e-11	-1.56E+00
% 8e-11	-3.89E-01
For a Different Percent DAC Enter DAC Value Below	
1.00E-11	-3.11E+00

Alpha Activity by 4.74E-7 arV (.7)(1)(Volume in mL)	-5.214E-08 / 167475
Beta Activity by 4.74E-7 arV (1)(1)(Volume in mL)	-6.4938E-07 / 239250

Beta Concentration in microCi/mL	-2.71E-12
% 6E-8 (Based on Th-234)	-4.52E-03
For a Different Percent! DAC Enter DAC Value Below	
6.00E-08	-4.52E-03

Use This for Calculating Minimum Detectible Concentration in MicroCi/mL

Enter Alpha MDA	0.34	Enter Beta MDA	5.07
Alpha MDA*4.74E-7	1.6116E-07	Beta MDA*4.74E-7	2.40318E-06
arV (.7)(1)(Vol. In mL)	167475	arV (1)(1)(Vol. In mL)	239250
Alpha MDC in microCi/mL	9.62E-13	Beta MDC in microCi/mL	1.00E-11

Use This For Calculating +/- 2 Sigma on Air Samples Counted on 2929's

	ALPHA		BETA
Gr Sample Count Rate,cpm	0.19	Gr Sample Count Rate,cpm	47.06
Gr Sample Count Time,min	300	Gr Sample Count Time,min	300
Bkgr. Count Rate, cpm	0.23	Bkgr. Count Rate, cpm	46.61
Bkgr Count Time, min.	480	Bkgr Count Time, min.	480
Counter Efficiency %	0.3658	Counter Efficiency %	0.3281
+/- 2 Sigma, dpm	0.18	+/- 2 Sigma, dpm	3.07

NOTES:

Data to be entered goes in	
Results are displayed in	

Printed Name:	Angel Roberts
Signature & Date: Angel Roberts	8/15/01

COPY

AIR SAMPLE CALCULATION WORKSHEET

KLK 9/8/01 PAGE 1 OF 3

SURVEY INFORMATION SAMPLING RCT NAME Rod Curtis SIGNATURE [signature] BADGE 864802

Purpose of Survey: (Job Coverage) General Area - Low Vol. (High Vol.) Lapel Environmental Other:

Project-Building/Location: DMSA 331-09 Work Description: Inventory

Survey #: 01- ER - 1222 -A RWP #: 01-DOE- 48 - S

SAMPLING INSTRUMENTATION

Model: ☐HD-29A ☐AVS-28A ☐ MRV-1023CV ☐ BuckHF ☐ BuckIH ☐ SKC BZA ☒ TFIA ☐ HVP-3800AFC ☐ Basic-12 ☐ VSS-12

Serial No.: 19913XN Cal. Due Date: 8-7-02

MEDIA DESCRIPTION

Filter Media: ☒ What-41 – 4 inch ☐ MF ☐ What-41 – 8x10 inch ☐ AA

NOTE: 1 CFM = 28.32 LPM

Start Date	Start Time	Start Flow (CFM / LPM)	Stop Date	Stop Time	Stop Flow (CFM / LPM)	Flow Duration (Minutes) †	Average Flow Rate (LPM)	Total Air Volume (L)
8-10-01	1245	20	8-10-01	1315	20	30	566.4 ~~849~~ 8-10-01	16992

Area Posted as ARA?	Were Respirators Worn?	Respirator Type and Protection Factor? ☒ N/A	
☐ Yes ☒ No	☐ Yes ☒ No	☐ APR (50) ☐ PAPR or Supplied Air Hood (1000) ☐ SCBA (10000) ☐ Airline or Supplied Air Full Face (2000)	Lapel Worn By: NA Badge Number: NA

LABORATORY INFORMATION LAB RCT NAME Kris Wattrauf SIGNATURE [signature] BADGE 704646

INSTRUMENTATION USED		Serial #:	Cal Due Date:	Alpha Efficiency	Beta Efficiency
☒ Tennelec (Series 2 / Series 5)	☐ Ludlum 2929 ☐ Berthold LB770	686 76	12-21-01	0.23	0.29
INSTRUMENTATION USED		Serial #:	Cal Due Date:	Alpha Efficiency	Beta Efficiency
☐ Tennelec ~~Series~~ 2 / Series 5	☐ Ludlum 2929 ☐ Berthold LB770	N/A			

ANALYSIS INFORMATION

DATE	TIME	Type	Bkg. Time (Minutes)	Counter Lc (DPM)	Counter MDA (DPM)	Sample Count Time (Minutes)	Gross Sample (CPM)	Bkg. (CPM)	Net Sample (CPM)	Net Sample (DPM) ††	Error 2σ (DPM)
8/13/01	1326	Alpha	30	0.94	2.48	20	0.32	0.20	0.12	0.44	1.30
		Beta	30	1.42	2.35	20	1.76 ~~2.15~~ KW 8-15-01	0.73	KW 8-15-01 ~~1.42~~ 1.03	3.56	2.35
DATE	TIME	Type	Bkg.Time (Minutes)	Counter Lc (DPM)	Counter MDA (DPM)	Sample Count Time (Minutes)	Gross Sample (CPM)	Bkg. (CPM)	Net Sample (CPM)	Net Sample (DPM) ††	Error 2σ (DPM)

Ribertz

Alpha DAC (µCi/ml)	Posting Level (µCi/ml)	Concentration (µCi/ml)	Concentration (% DAC) †††
2E-12	5E-13	6.05E-14	~~3.02~~ WLK 8-17-01 <MDC
Beta DAC (µCi/ml)	Posting Level (µCi/ml)	Concentration (µCi/ml)	Concentration (% DAC) †††
6 E-08	1.5 E-08	3.42E-13	5.71E-04

† ☐ (Lapels Only) Sample did not run for minimum time of 120 minutes. Detector MDA @ this run time may exceed 10% of DAC.

Alpha MDC (µCi/ml) = 3.41E-13 Beta MDC (µCi/ml) = 2.26E-13

†† Send samples > 100 DPM Alpha to the laboratory for isotopic analysis.

††† Notify Operations Support Manager or designee when 10% of DAC is exceeded.

COPY

* ☐ See Air Sample Calculation Worksheet Continuation Form.

Reviewed By: WC Hodges Date: 8-17-01 Data Entry KR 8-31

PAD/RCO-037 Rev. 10 (07/01)

I

SEC RadCon Alliance - Paducah 5:22:1CP

Survey Number 01-ER-1222-A

Smear and Air **Sample** Activity Report

8/13/01

Batch ID:	20 Minute Air Samples - 200108131326	Acquisition Date:	8/13/01
Group **ID:**	I Device Serial Number: 68676	Acquisition Time: (minutes)	20.0
Device Name:	Tennelec Series 2		
Selected Geometry:	Swipe/Smear	Operating Voltage: (volts)	1,485.0

Efficiency Factors			Daily 30 Minute Background CPM		Batch Critical Level DPM	
Alpha Efficiency -	0.23	± 0.00	Alpha Background (CPM) -	0.20	Alpha Lc -	0.94
Beta Efficiency -	0.29	± 0.01	Beta Background (CPM) -	0.73	Beta Lc -	1.42

Sample ID	Quantity	Alpha DPM (DPM)	2σ	Alpha MDA (DPM)	Beta DPM (DPM)	2σ	Beta MDA (DPM)
200 10813132627-147	0.00	0.44	1.30	2.48	3.56	2.35	3.32

COPY

Count Room Review: [signature]

Sampling Tech Review: N/A

HI VOLS AIR SAMPLE CALCULATIONS

Survey Number	01-ER-1222-A
Start Date/Time	8/10/01 12:45
End Date/Time	8/10/01 13:15
	1/0/00 0:30

Days Elapsed	0	0
Hours Elapsed	0	0
Minutes Elapsed	30	30
Total Minutes		30

Start Flow CFM	20
Stop Flow CFM	20
Average Flow	566.40
Total Volume Air (L)	16,992.00

Activity in dpm-Alpha	0.44
Activity in dpm-Beta	3.56
Volume in L	16,992.00
Volume in mL	16,992,000.00
Alpha Activity by 4.74E-7 arV (.7)(.29)(Volume in mL)	2.0856E-07 3449376.00
Beta Activity by 4.74E-7 arV (1)(.29)(Volume in mL)	1.68744E-06 4927680.00

Alpha Concentration in microCi/mL	6.05E-14
% 2e-12 (Based on Np-237)	3.02E+00
% 1e-10 (Drum Mountain)	6.05E-02
% 1.1E-11 (Tc-99 Tank)	5.50E-01
For a Different Percent DAC Enter DAC Value Below	
2.00E-11	3.02E-01

Beta Concentration in microCi/mL	3.42E-13
% 6E-8 (Based on TH-234)	5.71E-04
For a Different Percent DAC Enter DAC Value Below	
6.00E-08	5.71E-04

Use This for Calculating Minimum Detectible Concentration in MicroCi/mL

Enter Alpha MDA	2.48
Alpha MDA*4.74E-7	1.17552E-06
arV (.7)(.29)(Vol. In mL)	3449376
Alpha MDC in microCi/mL	3.41E-13

Enter Beta MDA	2.35
Beta MDA*4.74E-7	1.1139E-06
arV (1)(.29)(Vol. In mL)	4927680
Beta MDC in microCi/mL	2.26E-13

NOTES:

Data to be entered goes in	
Results are displayed in	

Printed Name:	Angel Roberts
Signature/Date:	Angel Roberts 8/15/01

COPY

RECORD COPY KLR 9/8/01

AIR SAMPLE CALCULATION WORKSHEET

PAGE 1 OF 2

SURVEY INFORMATION SAMPLING RCT NAME Danny Hayes SIGNATURE Danny Hayes BADGE 705193

Purpose of Survey: (Job Coverage) General Area - Low Vol. High Vol. (Lapel) Environmental Other: _____

canning

SAMPLING INSTRUMENTATION

Model: OHD-29A ☐AVS-28A ☐MRV-1023CV ☐ BuckHF ☐ BuckIH ☐ SKC BZA ☐TFIA ☐ HVP-3800AFC ☐ Basic-I2 ☑VSS-12

Serial No.: V12019 Cal. Due Date: 8-24-01

MEDIA DESCRIPTION

Filter Media: ☐ What41 – 4 inch ☐ MF ☐ What-41 – 8x10 inch ☑AA

NOTE: 1 CFM = 28.32 LPM

Start Date	Start Time	Start Flow CFM / LPM	Stop Date	Stop Time	Stop Flow CFM / LPM	Flow Duration (Minutes) †	Average Flow Rate (LPM)	Total Air Volume (L)
8-10-01	1250	7.96	8-10-01	1315	7.96	25	7.96	199

Area Posted as ARA?	Were Respirators Worn?	Respirator Type and Protection Factor?	
☐ Yes ☑ No	☐ Yes ☑ No	☐ APR (50) ☐ PAPR or Supplied Air Hood (1000) ☐ SCBA (10000) ☐ Airline or Supplied Air Full Face (2000) ☑ N/A	Lapel Worn By: Brad Story Badge Number: 704277

INSTRUMENTATION USED		Serial #:	Cal Due Date:	Alpha Efficiency	Beta Efficiency
☐Tennelec Series 2 / Series 5	☑ Ludlum 2929 ☐ Berthold LB770	142653	1-30-02	0.3658	0.3725
INSTRUMENTATION USED		Serial #:	Cal Due Date:	Alpha Efficiency	Beta Efficiency
☐Tennelec Series 2 /Series 5	☐ Ludlum 2929 ☐ Berthold LB770	N/A			

DATE	TIME	Type	Bkg. Time (Minutes)	Counter Lc (DPM)	Counter MDA (DPM)	Sample Count Time (Minutes)	Gross Sample (CPM)	Bkg. (CPM)	Net Sample (CPM)	Net Sample (DPM) ††	Error 2σ (DPM)
8-15-01	10:30	Alpha	480	0.21	0.44	300	0.40	0.40	0.00	0.00	0.25
		Beta	480	2.27	4.57	300	45.51	48.84	-3.33	-8.94	2.70
DATE	TIME	Type	Bkg. Time (Minutes)	Counter Lc (DPM)	Counter MDA (DPM)	Sample Count Time (Minutes)	Gross Sample (CPM)	Bkg. (CPM)	Net Sample (CPU)	Net Sample (DPM) ‡	Error 2σ (DPM)
N/A		Alpha									
		Beta									

CALCULATED BY: NAME Julie Woods SIGNATURE Julie Woods BADGE 703511

Alpha DAC (µCi/ml)	Posting Level (µCi/ml)	Concentration (µCi/ml)	Concentration (% DAC) †††
2E-12	5E-13	Ø	Quick Count < MDC
Beta DAC (µCi/ml)	**Posting Level (µCi/ml)**	**Concentration (µCi/ml)**	**Concentration (% DAC) †††**
6 E-08	1.5 E-08	-2.13E-11	< MDC

† ☑ (Lapels Only) Sample did not run for minimum time of 120 minutes. Detector MDA @ this run time may exceed 10% of DAC.

Alpha MDC (µCi/ml) = 1.50E-12 Beta MDC (µCi/ml) = 1.09E-11

†† Send samples > 100 DPM Alpha to the laboratory for isotopic analysis.

††† Notify Operations Support Manager or designee when 10% of DAC is exceeded.

• ☐ See Air Sample Calculation Worksheet Continuation Form.

counts α 120
β 13653

COPY

Reviewed By: WC Hodges Date: 8-17-01 Data Entry KLR 9-6

LOW VOLS/LAPEL BZA AIR SAMPLE CALCULATIONS

Survey Number	01-ER-1224-A
Start Date/Time	8/10/01 12:50
End Date/Time	8/10/01 13:15
	1/0/00 0:25

Start Flow LPM	7.96
Stop Flow LPM	7.96
Average Flow	7.96
Total Volume Air (L)	199.00

Days Elapsed	0	0
Hours Elapsed	0	0
Minutes Elapsed	25	25
Total Minutes		25

Activity in dpm-Alpha	0.00
Activity in dpm-Beta	-8.94
Volume in L	199.00
Volume in mL	199000.00
Alpha Activity by 4.74E-7 arV (.7)(1)(Volume in mL)	0
Beta Activity by 4.74E-7 arV (1)(1)(Volume in mL)	-4.23756E-06
	199000

Alpha Concentration in microCi/mL	0.00E+00
% 2e-12 (Based on Np-237)	0.00E+00
% 2e-11	0.00E+00
% 8e-11	0.00E+00
For a Different Percent DAC Enter DAC Value Below	
1.00E-11	0.00E+00

Beta Concentration in microCi/mL	-2.13E-1
% 6E-8 (Based on Th-234)	-3.55E-0
For a Different Percent DAC Enter DAC Value Below	
6.00E-08	-3.55E-0

Use This for Calculating Minimum Detectible Concentration in MicroCi/mL

Enter Alpha MDA	0.44
Alpha MDA*4.74E-7	2.0856E-07
arV (.7)(1)(Vol. In mL)	139300
Alpha MDC in microCi/mL	1.50E-12

Enter Beta MDA	4.5
Beta MDA*4.74E-7	2.16618E-0
arV (1)(1)(Vol. In mL)	19900
Beta MDC in microCi/mL	1.09E-1

Use This For Calculating +/- 2 Sigma on Air Samples Counted on 2929's

Gr Sample Count Rate,cpm	0.4
Gr Sample Count Time,min	3
Bkgr. Count Rate, cpm	(
Bkgr Count Time, min.	4
Counter Efficiency %	0.36
+/- 2 Sigma, dpm	

	BETA
Gr Sample Count Rate,cpm	45.51
Gr Sample Count Time,min	300
Bkgr. Count Rate, cpm	48.84
Bkgr Count Time, r	480
Counter Efficiency	0.3725
+/- 2 Sigma, dpm	2.70

NOTES:

DATA TO BE ENTERED GOES IN

RESULTS ARE DISPLAYED IN

Printed Name: Julie Woods

Signature & Date: Julie Woods 8/17/01

COPY

AIR SAMPLE CALCULATION WORKSHEET

RECORD COPY KLR 9/8/01 PAGE 1 OF 2

SURVEY INFORMATION SAMPLING RCT NAME Mark Tuck SIGNATURE [signature] BADGE 704985

N

TAPE

SAMPLING INSTRUMENTATION

Model: ☐ HD-29A ☐ AVS-28A ☐ MRV-1023CV ☐ BuckHF ☐ BuckIH ☐ SKC BZA ☐ TFIA ☐ HVP-3800AFC ☐ Basic-12 ☒ VSS-12

Serial No.: V12021 Cal. Due Date: 8-24-01

MEDIA DESCRIPTION

Filter Media: ☐ What-41 – 4 inch ☐ MF ☐ What-41 – 8x10 inch ☒ AA

NOTE: 1 CFM = 28.32 LPM

Start Date	Start Time	Start Flow CFM / LPM	Stop Date	Stop Time	Stop Flow CFM / LPM	Flow Duration (Minutes) †	Average Flow Rate (LPM)	Total Air Volume (L)
8-23-01	1216	7.98	8-23-01	1250	7.96	34	7.97	270.98

Area Posted as ARA?	Were Respirators Worn?	Respirator Type and Protection Factor? ☒ N/A	Lapel Worn By: MARTHA MASON
☐ Yes ☒ No	☐ Yes ☒ No	☐ APR (50) ☐ SCBA (10000) ☐ PAPR or Supplied Air Hood (1000) ☐ Airline or Supplied Air Full Face (2000)	Badge Number: 31022

Kri

INSTRUMENTATION USED	Serial #:	Cal Due Date:	Alpha Efficiency	Beta Efficiency
☐ Tennelec Series 2 / Series 5 ☐ Ludlum 2929 ☐ Berthold LB770	142651	6/22/02	.3543	.3396
INSTRUMENTATION USED: ☐ Tennelec Series 2 / Series 5 ☐ Ludlum 2929 ☐ Berthold LB770	N/A	N/A	N/A	N/A

DATE	TIME	Type	Bkg. Time (Minutes)	Counter Lc (DPM)	Counter MDA (DPM)	Sample Count Time (Minutes)	Gross Sample (CPM)	Bkg. (CPM)	Net Sample (CPM)	Net Sample (DPM) ††	Error 2σ (DPM)
8-28-01	0930	Alpha	480	.18	.39	300	0.40	.29	0.11	0.31	0.25
		Beta	480	2.86	5.74	300	64.78	64.25	0.53	1.56	3.48
DATE	TIME	Type	Bkg. Time (Minutes)	Counter Lc (DPM)	Counter MDA (DPM)	Sample Count Time (Minutes)	Gross Sample (CPM)	Bkg. (CPM)	Net Sample (CPM)	Net Sample (DPM) ††	Error 2 a (DPM)
		Alpha				N					
		Beta				A					

Alpha DAC (µCi/ml)	Posting Level (µCi/ml)	Concentration (µCi/ml)	Concentration (% DAC) †††
2E-12	5E-13	7.75E-13	LMDC
Beta DAC (µCi/ml)	Posting Level (µCi/ml)	Concentration (µCi/ml)	Concentration (% DAC) †††
6 E-08	1.5 E-08	2.73E-12	LMDC

† ☒ (Lapels Only) Sample did not run for minimum time of 120 minutes. Detector MDA @ this run time may exceed 10% of DAC.

Alpha MDC (µCi/ml) = 9.75E-13 Beta MDC (µCi/ml) = 1.00E-11

COPY

†† Send samples > 100 DPM Alpha to the laboratory for isotopic analysis.

††† Notify Operations Support Manager or designee when 10% of DAC is exceeded.

* ☐ See Air Sample Calculation Worksheet Continuation Form. Counts α-119 β-19433

Reviewed By: Linda Stryker/[signature] Date: 8-31-01 Data Entry KLR-5

PAD/RCO-037 Rev. 10 (07/01)

LOW VOLS/LAPEL BZA AIR SAMPLE CALCULATIONS

Survey Number	01-ER-1381-A
Start Date/Time	8/23/01 12:16
End Date/Time	8/23/01 12:50
	1/0/00 0:34

Start Flow LPM	7.98
Stop Flow LPM	7.96
Average Flow	7.97
Total Volume Air (L)	270.98

Days Elapsed	0	0
Hours Elapsed	0	0
Minutes Elapsed	34	34
Total Minutes		34

Activity in dpm-Alpha	0.31
Activity in dpm-Beta	1.56
Volume in L	270.98
Volume in mL	270980.00
Alpha Activity by 4.74E-7	1.4694E-07
arV (.7)(1)(Volume in mL)	189686
Beta Activity by 4.74E-7	7.3944E-07
arV (1)(1)(Volume in mL)	270980

Alpha Concentration in microCi/mL	7.75E-13
% 2e-12 (Based on Np-237)	3.87E+01
% 2e-11	3.87E+00
% 8e-11	9.68E-01
For a Different Percent DAC Enter DAC Value Below	
1.00E-11	7.75E+00

Beta Concentration in microCi/mL	2.73E-12
% 6E-8 (Based on Th-234)	4.55E-03
For a Different Percent DAC Enter DAC Value Below	
6.00E-08	4.55E-03

Use This for Calculating Minimum Detectible Concentration in MicroCi/mL

Enter Alpha MDA	0.39	Enter Beta MDA	5.74
Alpha MDA*4.74E-7	1.8486E-07	Beta MDA*4.74E-7	2.72076E-06
arV (.7)(1)(Vol. In mL)	189686	arV (1)(1)(Vol. In mL)	270980
Alpha MDC in microCi/mL	9.75E-13	Beta MDC in microCi/mL	1.00E-11

Use This For Calculating +/- 2 Sigma on Air Samples Counted on 2929's

	ALPHA		BETA
Gr Sample Count Rate,cpm	0.4	Gr Sample Count Rate,cpm	64.78
Gr Sample Count Time,min	300	Gr Sample Count Time,min	300
Bkgr. Count Rate, cpm	0.29	Bkgr. Count Rate, cpm	64.25
Bkgr Count Time, min.	480	Bkgr Count Time, min.	480
Counter Efficiency %	0.3543	Counter Efficiency %	0.3396
+/- 2 Sigma, dpm	0.25	+/- 2 Sigma, dpm	3.48

NOTES:

DATA TO BE ENTERED GOES IN

RESULTS ARE DISPLAYED IN

Printed Name: Julie Woods

Signature & Date: Julie Woods 8/29/01

COPY

AIR SAMPLE CALCULATION WORKSHEET

~~RECORD COPY~~ KLR 9/8/01 PAGE 1 OF 3

SURVEY INFORMATION SAMPLING RCT NAME Rod Curtis SIGNATURE [signature] BADGE 741055

Purpose of Survey: Job Coverage/ General Area - Low Vol. (High Vol.) Lapel Environmental Other:

Project-Building/Location: DMSA- C-331-09 Work Description: Dust

Survey #: 01- ER - 1382 -A RWP #: 01-DOE- 48 - S

SAMPLING INSTRUMENTATION

Model: ☐ HD-29A UAVS-28A ☐ MRV-1023CV ☐ BuckHF ☐ BuckIH ○ SKC BZA ☒ TFIA ○ HVP-3800AFC ☐ Basic-12 ○ VSS-12

Serial No.: 11913N Cal. Due Date: 8-7-02

MEDIA DESCRIPTION

Filter Media: ☒ What-41 – 4 inch ☐ MF ○ What-41 – 8x10 inch ☐ AA

NOTE: 1 CFM = 28.32 LPM

Start Date	Start Time	Start Flow CFM / LPM	Stop Date	Stop Time	Stop Flow CFM / LPM	Flow Duration (Minutes) †	Average Flow Rate (LPM)	Total Air Volume (L)
8-23-01	1225	2.0	8-23-01	1255	2.0	30	2.0	16.992

Area Posted as ARA? ☐ Yes ☒ No

Were Respirators Worn? ☐ Yes ☒ No

Respirator Type and Protection Factor? ☒ N/A ☐ APR (50) ○ PAPR or Supplied Air Hood (1000) ☐ SCBA (10000) ○ Airline or Supplied Air Full Face (2000)

Lapel Worn By: N/A

Badge Number:

LABORATORY INFORMATION LAB RCT NAME Kris Weithauf SIGNATURE [signature] BADGE 704646

INSTRUMENTATION USED	Serial #:	Cal Due Date:	Alpha Efficiency	Beta Efficiency
☒ Tennelec Series 2 / Series 5 ☐ Ludlum 2929 ☐ Berthold LB770	36643	12-6-01	0.27	0.40
☐ Tennelec Series 2 / Series 5 ☐ Ludlum 2929 ☐ Berthold LB770	N/A			

COPY

ANALYSIS INFORMATION

DATE	TIME	Type	Bkg. Time (Minutes)	Counter Lc (DPM)	Counter MDA (DPM)	Sample Count Time (Minutes)	Gross Sample (CPM)	Bkg. (CPM)	Net Sample (CPM)	Net Sample (DPM) ††	Error 2σ (DPM)
8/28/01	1246	Alpha	30	0.72	1.94	20	0.00	0.17	-0.17	-0.62	0.55
		Beta	30	1.39	3.12	20	3.71	1.37	2.34	5.85	2.41
DATE	TIME	Type	Bkg. Time (Minutes)	Counter Lc (DPM)	Counter MDA (DPM)	Sample Count Time (Minutes)	Gross Sample (CPM)	Bkg. (CPM)	Net Sample (CPM)	Net Sample (DPM) ††	Error 2σ (DPM)
N/A		Alpha									
		Beta									

Julie W. Julie Woods BADGE 703711

Beta DAC (µCi/ml)	Posting Level (µCi/ml)	Concentration (µCi/ml)	Concentration (% PAC) †††
6 E-08	5 E-08	5.63E-13	9.38E-4
			< MDC

† ☐ (Lapels Only) Sample did not run for minimum time of 120 minutes. Detector MDA @ this run time may exceed 10% of DAC.

Alpha MDC (µCi/ml) = 2.67E-13 Beta MDC (µCi/ml) = 3.00E-13

†† Send samples > 100 DPM Alpha to the laboratory for isotopic analysis.

††† Notify Operations Support Manager or designee when 10% of DAC is exceeded.

• ☐ See Air Sample Calculation Worksheet Continuation Form.

Reviewed By: [signature] Date: 8-30-01 Data Entry [signature] 8-31

PAD/RCO-037 Rev. 10 (07/01)

A

SEC RadCon Alliance - Paducah

1:37:18P

Survey Number OHER-1382-A

Smear and Air Sample Activity Report

8/28/01

Batch ID:	20 Minute Air Samples - 200108281246	Acquisition Date:	8128101
Group ID:	A Device Serial Number: 36643	Acquisition Time: (minutes)	20.0
Device Name:	Tennelec Series 5		
Selected Geometry:	Swipe/Smear	Operating Voltage: (volts)	1387.0

Efficiency Factors			Daily 30 Minute Background CPM		Batch Critical Level DPM	
Alpha Efficiency -	0.27	± 0.00	Alpha Background (CPM) -	0.17	Alpha Lc -	0.72
Beta Efficiency -	0.40	± 0.01	Beta Background (CPM) -	1.37	Beta Lc -	1.39

Sample ID	Quantity	Alpha DPM (DPM)	2σ	Alpha MDA (DPM)	Beta DPM (DPM)	2σ	Beta MDA (DPM)
20010828124643-A1	0.00	-0.62	0.55	1.94	5.85	2.41	3.12

COPY

Count Room Review: Kris Whitehead

Sampling Tech Review: N/A

HI VOLS AIR SAMPLE ONS

Page 3

Survey Number	01-ER-1382-A			
Start Date/Time	8/23/01 12:25		Start Flow CFM	20
End Date/Time	8/23/01 12:55		Stop **Flow** CFM	20
	1/0/00 0:30		Average Flow	566.40
Days Elapsed	0	0	Total Volume Air (L)	16,992.00
Hours Elapsed	0	0		
Minutes Elapsed	30	30		
Total Minutes		30		

Activity in dpm-Alpha	-0.62	**Alpha Concentration in microCi/mL**	-8.52E-14
Activity in dpm-Beta	5.851	% 2e-12 (Based on Np-237)	-4.26E+00
Volume in L	16,992.00	% 2e-11	-4.26E-01
Volume in mL	[illegible]	% 8e-11	-1.06E-01
		For a Different Percent DAC Enter DAC Value Below	
Alpha Activity by **4.74E-7**	-2.9388E-07	1.00E-11	-8.52E-01
arV (.7)(.29)(Volume in mL)	3449376.00		
Beta Activity **by 4.74E-7**	2.7729E-06	**Beta Concentration in microCi/mL**	5.63E-13
arV (1)(.29)(Volume in mL)	4927680.00	% 6E-8 (Based on TH-234)	9.38E-04
		For a Different Percent DAC Enter DAC Value Below	
		6.00E-08	9.38E-04

Use This for Calculating Minimum Detectible Concentration in MicroCi/mL

Enter Alpha MDA	1.94	Enter Beta MDA	3.12
Alpha MDA*4.74E-7	9.1956E-07	[illegible]	1.47888E-06
arV (.7)(.29)(Vol. In mL)	3449376	[illegible] mL)	4927680
Alpha MDC in microCi/mL	2.67E-13	MDC in microCi/mL	3.00E-13

NOTES:

DATA TO BE ENTERED GOES IN

RESULTS ARE DISPLAYED IN

Printed Name: Julie Woods

Signature/Date: Julie Woods 8/30/01

COPY

AIR SAMPLE CALCULATION WORKSHEET

REVIEWED COPY KLR 9/8/01

PAGE 1 OF 3

SURVEY INFORMATION SAMPLING RCT NAME Rod Curtis SIGNATURE [signature] BADGE 741053

Purpose of Survey: Job Coverage/ General Area - Low Vol. High Vol. Lapel Environmental Other:

Project-Building/Location: C-331 DMSA 9 Work Description: Identification & Tagging

Survey #: 01-ER-1414 -A RWP #: OI-DOE-48 -5

SAMPLING INSTRUMENTATION

Model: ☐ HD-29A ☐ AVS-28A ☒ MRV-1023CV ☐ BuckHF ☐ BuckIH ☐ SKC BZA ☐ TFIA ☐ HVP-3800AFC ☐ Basic-12 ☐ VSS-12

Serial No.: 9324 Cal. Due Date: 7-18-02

MEDIA DESCRIPTION

Filter Media: ☐ What41 – 4 inch ☐ MF ☐ What-41 – 8x10 inch ☒ AA

NOTE: 1 CFM = 28.32 LPM

Start Date	Start Time	Start Flow CFM / LPM	Stop Date	Stop Time	Stop Flow CFM / LPM	Flow Duration (Minutes) †	Average Flow Rate (LPM)	Total Air Volume (L)
8-9-01	1320	50	8-23-01	0900	70	19,900	60	1,194,000

Area Posted as ARA? ☐ Yes ☒ No

Were Respirators Worn? ☐ Yes ☒ No

Respirator Type and Protection Factor? ☒ N/A ☐ APR (50) ☐ PAPR or Supplied Air Hood (1000) ☐ SCBA (10000) ☐ Airline or Supplied Air Full Face (2000)

Lapel Worn By: N/A

Badge Number:

INSTRUMENTATION USED	Serial #:	Cal Due Date:	Alpha Efficiency	Beta Efficiency
☒ Tennelec Series 2 / Series 5 ☐ Ludlum 2929 ☐ Berthold LB770	36643	12-6-01	0.27	0.40
☐ Tennelec Series 2 ☐ Series 5 ☐ Ludlum 2929 ☐ Berthold LB770	N/A			

ANALYSIS INFORMATION

DATE	TIME	Type	Bkg. Time (Minutes)	Counter Lc (DPM)	Counter MDA (DPM)	Sample Count Time (Minutes)	Gross Sample (CPM)	Bkg. (CPM)	Net Sample (CPM)	Net Sample (DPM) ††	Error 2σ (DPM)
8/28/01	0951	Alpha	30	0.72	1.94	20	1.30	0.17	1.13	4.20	
		Beta	30	1.39	3.12	20	23.17	1.37	22.34	55.86	
DATE	TIME	Type	Bkg.Time (Minutes)	Counter Lc (DPM)	Counter MDA (DPM)	Sample Count Time (Minutes)	Gross Sample (CPM)	Bkg. (CPM)	Net Sample (CPM)	Net Sample (DPM) ††	(DPM)
N/A		Alpha									
		Beta									

Alpha DAC (µCi/ml)	Posting Level (µCi/ml)	Concentration (µCi/ml)	Concentration (% DAC) †††
2E-12	5E-13	2.38E-15	1.19E-1
Beta DAC (µCi/ml)	**Posting Level (µCi/ml)**	**Concentration (µCi/ml)**	**Concentration (% DAC) †††**
		2.22E	

† ☐ (Lapels Only) Sample did not run for minimum time of 120 minutes. Detector MDA @ this run time may exceed 10% of DAC.

Alpha MDC (µCi/ml) = 1.10E-15 Beta MDC (µCi/ml) = 1.24E-15

†† Send samples > 100 DPM Alpha to the laboratory for isotopic analysis.

††† Notify Operations Support Manager or designee when 10% of DAC is exceeded.

• ☐ See Air Sample Calculation Worksheet Continuation Form.

COPY

Reviewed By: WC Hooks Date: 8-30-01 Data Entry KR 9-5

A

PAD/RCO-037 Rev. 10 (07/01)

SEC RadCon Alliance - Paducah

Survey Number 01-EZ-1414-A

Smear and Air Sample Activity Report

8/28/01

Batch ID:	20 Minute Air Samples - 200108280951			**Acquisition Date:**	8/28/01
Group ID:	A	**Device Serial Number:**	36643	**Acquisition Time: (minutes)**	20.0
Device Name:	Tennelec Series 5				
Selected Geometry:	Swipe/Smear			**Operating Voltage: (volts)**	1,387.0

Efficiency Factors				Daily 30 Minute Background CPM		Batch Critical Level DPM	
Alpha Efficiency -	0.27	±	0.00	**Alpha Background (CPM) -**	0.17	**Alpha Lc -**	0.72
Beta Efficiency -	0.40	±	0.01	**Beta Background (CPM) -**	1.37	**Beta Lc -**	1.39

Sample ID	Quantity	Alpha DPM (DPM)	2σ	Alpha MDA (DPM)	Beta DPM (DPM)	2σ	Beta MDA (DPM)
20010828095126-A1	0.00	**4.20**	1.97	1.94	***55.86***	5.69	3.12

COPY

Count Room Review: Kris Whitley

Sampling Tech Review: N/A

LOW VOLS/LAPEL BZA AIR SAMPLE CALCULATIONS

Survey Number	01-ER-1414-A	
Start Date/Time	8/9/01 13:20	
End Date/Time	8/23/01 9:00	
	1/13/00 19:40	
Days Elapsed	13	18720
Hours Elapsed	19	1140
Minutes Elapsed	40	40
Total Minutes		19900
Activity in dpm-Alpha	4.20	
Activity in dpm-Beta	55.86	
Volume in L	1194000.00	
Volume in mL	1194000000.00	
Alpha Activity by 4.74E-7	1.9908E-06	
arV (.7)(1)(Volume in mL)	835800000	
Beta Activity by 4.74E-7	2.64776E-05	
arV (1)(1)(Volume in mL)	1194000000	

Start Flow LPM	50
Stop Flow LPM	70
Average Flow	60.00
Total Volume Air (L)	1194000.00

Alpha Concentration in microCi/mL	2.38E-15
% 2e-12 (Based on Np-237)	1.19E-01
% 2e-11	1.19E-02
% 8e-11	2.98E-03
For a Different Percent DAC Enter DAC Value Below	
1.00E-11	2.38E-02
Beta Concentration in microCi/mL	2.22E-14
% 6E-8 (Based on Th-234)	3.70E-05
For a Different Percent DAC Enter DAC Value Below	
6.00E-08	3.70E-05

Use This for Calculating Minimum Detectible Concentration in MicroCi/mL

Enter Alpha MDA	1.94	Enter Beta MDA	3.12
Alpha MDA*4.74E-7	9.1956E-07	Beta MDA*4.74E-7	1.47888E-06
arV (.7)(1)(Vol. In mL)	835800000	arV (1)(1)(Vol. In mL)	1194000000
Alpha MDC in microCi/mL	1.10E-15	Beta MDC in microCi/mL	1.24E-15

Use This For Calculating +/- 2 Sigma on Air Samples Counted on 2929's

	ALPHA		BETA
Gr Sample Count Rate,cpm		Gr Sample Count Rate,cpm	
Gr Sample Count Time,min	300	Gr Sample Count Time,min	300
Bkgr. Count Rate, cpm		Bkgr. Count Rate, cpm	
Bkgr Count Time, min.	480	Bkgr Count Time, min.	480
Counter Efficiency %		Counter Efficiency %	
+/- 2 Sigma, dpm	#DIV/0!	+/- 2 Sigma, dpm	#DIV/0!

NOTES:

DATA TO BE ENTERED GOES IN

RESULTS ARE DISPLAYED IN

Printed Name: Julie Woods

Signature & Date: Julie Woods 8/30/01

COPY

Section 12.

IH SAMPLING DATA

USEC
A Global Energy Company

August 16,2001

Ms. Jan Buckmaster
5600 Hobbs Road
Paducah, KY 42001

Ms. Marie Meszaros
Sample Management Office
NFT Incorporated
East Tennessee Technical Park
Building K 1035, Room 114
Hwy. 58 and Blair Road
Oak Ridge, TN 37830

Dear Ms. Buckmaster and Ms. Meszaros:

Analytical Results – SDG No. 5069B – 081601 (P.O. 0000793)

The enclosed data reports contain analytical results of samples that were submitted to the Portsmouth Laboratory for SOW KCWO05069B on July 31 – August 3,2001.

If you have any questions concerning the analyses or the data, please contact Nancy Smith at (740)897-3824.

Sincerely,

Elisabeth Gilbert for Debby Perez

Debby Perez
ES&H Analytical Group Manager

DKP:ver

Enclosure

File: POEF-330-01-228

United States Enrichment Corporation
Portsmouth Gaseous Diffusion Plant, P.O. Box 628, Piketon, OH 45661
Telephone 740-897-2331 Fax 740-897-2909 http://www.usec.com

08/15/01 12:00
3109Z1-2METW01

X012130102

Portsmouth Analytical Laboratory
Official Report

Customer Smpl Id: 3109Z1-2METW01
Project:X-02-IH KCW005069B
Subproj Analyses:WIPE
Customer:N J SMITH

Matrix: WIPE
Protocol:NONE
Status: APPROVED
Location:

Sampled: 07/20/01 10:10:00
Received: 08/01/01 14:00:32
Needed: 08/15/01 23:59:00
Approved: 08/14/01 13:07:16

COC#: 3109IHIE-01
Sample Desc:
Customer Comments:
Lab Smpl Comments:

Analy Meth:NIOSH-7300-1 QC Batch:QC01222001 Test:7300FILTER Rpt Basis:Not Corrected Date Approved
Prep Meth: Analyzed:08/10/01 00:00:00 E L SIMPSON Approver: E K GILBERT 08/14/01 13:0

Analyte Name	Result	+/-	unit	Qual	Pn	LCR	Dilu	HT	CLF
Arsenic	0.306		ug/wipe	U		0.306	1		
Barium	23.2		ug/wipe			0.0043	1		
Beryllium	1.28		ug/wipe			0.0004	1		
Cadmium	0.495		ug/wipe			0.0121	1		
Chromium	5.02		ug/wipe			0.0532	1		
Lead	13.2		ug/wipe			0.18	1		
Nickel	27.5		ug/wipe			0.0246	1		
Selenium	2.23		ug/wipe	BJ		0.36	1		
Silver	0.0043		ug/wipe	*JU		0.0041	1		
Thallium	0.172		ug/wipe	U		0.172	1		

Comments: Ba not an approved clement for NIOSH 7300, however, analysis was performed *per* customer's request.

QC Batch Comments: Se qualified as estimate due ko LCS exceeding acceprance limits.

Ag qualified as estimate due to one of two LCS's not meeting acceptane limits. It appears the Ag spike was lost during the preparation of the samples in the first LCS, therefore the samples were qualified.

EPA Qualifiers:

* - Duplicate analysis not within control limits.
B - Analyte result less than rhe Pracrical Quantitation Limit (PQL) and greater than or equal to the Instrument Detection Limit (IDL).
J - Qualify data for the sample as estimated.
U - Analyte analyzed for but undetected. Analyte result was below the Instrument Detection Limit (IDL).

USEC PORTS Analytical Lab
P.O. Box 628 Piketon OH 45661 740-897-5702
Lab Director: Deborah K. Perez

***** END OF REPORT *****

08/15/01 12:00
3109Z3-4METW01

X012130103

Portsmouth Analytical Laboratory
official Report

Customer Smpl Id: 3109Z3-4METW01
Project:X-02-IE XCW005069E
Subproj Analyses:WIPE
Customer:N J SMITH

Matrix: WIPE
Protocol:NONE
Status: APPROVED
Location:

Sampled: 07/20/01 10:15:00
Received: 08/01/01 14:00:32
Needed: 08/15/01 23:59:00
Approved: 08/14/01 13:07:40

COC#: 3105IWIE-01
Sample Desc:
Customer Comments:
Lab Smpl Comments:

Analy Meth:NIOSH-7300-1 QC Batch:QC01222001 Test:7300FILTER Rpt Basis:Not Corrected Date Approved
Prep Meth: Analyzed:08/10/01 00:00:00 E L SIMPSON Approver: E K GILBERT 08/14/01 13:07

Analyte Name	Result	+/-	Unit	Qual	Fn	LCR	Dilu	HT	CLF
Arsenic	0.308		ug/wipe	U		0.308	1		
Barium	4.83		ug/wipe			0.0286	1		
Beryllium	0.277		ug/wipe			0.004	1		
Cadmium	0.242		ug/wipe			0.0123	1		
Chromium	3.73		ug/wipe			0.533	1		
Lead	4.21		ug/wipe			0.18	1		
Nickel	35.1		ug/wipe			0.0246	1		
Selenium	0.36		ug/wipe	JU		0.36	3		
Silver	0.0043		ug/wipe	*JU		0.0041	1		
Thallium	0.356		ug/wipe	E		0.172	1		

Comments; Ba not an approved element for NIOSH 7300, however, analysis was performed per customer's request.

QC Batch Comments: Se qualified as estimate due to LCP exceeding acceptance limits.

Ag qualified as estimate due to one of two LCS's not meeting acceptance limits. It appears the Ag spike was lost during the preparation of the samples in the first LCS, therefore the samples were qualified.

EPA Qualifiers:
* - Duplicate analysis not within control limits.
I - Analyte result less than the Practical Quantitation Limit (PQL) and greater than or equal to the Instrument Detection Limit (IDL).
J - Qualify data for the sample as estimated.
U - Analyte analyzed for but undetected. Analyte result was below the Instrument Detection Limit (IDL).

WEC PORTS Analytical Lab
P.O. Box 628 Piketon OH 45661 740-837-5702
Lab Director: Deborah K. Perez
***** END OF REPORT *****

Portsmouth Analytical Laboratory
Official Report

Customer Smpl Id: 3109Z5-6METW01
Project:X-02-IH KCW005069E
Subproj Analyses:WIPE
Customer:N J SMITH

Matrix: WIPE
Protocol:NONE
Status: APPROVED
Location:

Sampled: 07/20/01 10:20:00
Received: 08/01/01 14:00:32
Needed: 08/15/01 23:59:00
Approved: 08/14/01 13:21:45

COC#: 3109IHIE-01
Sample Desc:
Customer Comments:
Lab Smpl Comments:

Analy Meth:NIOSH-7300-1 QC Batch:QC01222001 Test:7300FILTER Rpt Basis:Not Corrected Date Approved
Prep Meth: Analyzed:08/10/01 00:00:00 E L SIMPSON Approver: E K GILBERT 08/14/01 13:21

Analyte Name	Result	+/-	Unit	Qual	Fn	LCR	Dilu	HT	CLP
Arsenic	0.35		ug/wipe	B		0.308	1		
Barium	14.5		ug/wipe			0.0041	1		
Beryllium	0.679		ug/wipe			0.0041	1		
Cadmium	0.246		ug/wipe			0.0123	1		
Chromium	4.02		ug/wipe			0.0537	1		
Lead	19.7		ug/wipe			0.18	1		
Nickel	13.3		ug/wipe			0.0246	1		
Selenium	1.56		ug/wipe	BJ		0.36	1		
silver	0.0041		ug/wipe	*JU		0.0041	1		
Thallium	0.172		ug/wipe	U		0.172	1		

Comments: Ba not an approved element for NIOSH 7300, however. analysis was performed per customer's request.

QC Batch Comments: Se qualified as estimate due to LCS exceeding acceptance limits.

Ag qualified as estimate due to one of two LCS's not meeting acceptance limits. It appears the Ag spike was lost during the preparation of the samples an the first LCS, therefore the samples were qualified.

EPA Qualifiers:

- * - Duplicate analysis not within control limits.
- B - Analyte result less than the Practical Quantitation Limit (PQL) and greater than or equal to the Instrument Detection Limit (IDL).
- J - Qualify data for the sample as estimated.
- U - Analyte analyzed for bur undetected. Analyte result was below the Instrument Detection Limit (IDL).

USEC PORTS Analytical Lab
P.O. Box 628 Piketon OH 45661 740-897-5702
Lab Director: Deborah K. Perez

***** END OF REPORT *****

Portsmouth Analytical Laboratory
Official Report

Customer Smpl Id: 3109Z1-2PCBW01
Project:X-02-IN KCW005069P
Subproj Analyses:WIPE
Customer:N J SMITE

Matrix: WIPE
Protocol:NONE
Status: APPROVED
Location:

Sampled: 07/20/01 10:10:00
Received: 08/01/01 14:00:01
Needed: 08/15/01 23:59:00
Approved: 08/15/01 11:51:58

COC#: 3109IHIE-01
Sample Desc:
Customer Comments:
Lab Smpl Comments:

Analy Meth:PORTS-XP4-TS-OA7033 QC Batch:QC01227013 Test:PCBWIPE Rpt Basis:Not Corrected Date Approved
Prep Meth: Analyzed:08/14/01 00:00:00 F R MACHESKY Approver: E K GILBERT 08/15/01 11:51

Analyte Name	Result	+/-	Unit	Qual	Fn	LOR	Dilu	HT	CLF
PCB, Total	10		ug/wipe	U		10	1		

EPA Qualifiers:
U - Analyte analyzed for but undetected. Analyte result was below the Limit or Quantitation (LOQ).

USEC PORTS Analytical Lab
P.O. Box 628 Piketon OW 45661 740-897-5702
Lab Director: Deborah K. Perez

***** END OF REPORT *****

Portsmouth Analytical Laboratory
Official Report

Customer Smpl Id: 310923-4PCBW01
Project:X-02-IH KCW005069E
Subproj Analysee:WIPE
Customer:N J SMITH

Matrix: WIPE
Protocol:NONE
Status: APPROVED
Location:

Sampled: 07/20/01 10:15:00
Received: 08/01/01 14:00:00
Needed: 08/15/01 23:59:00
Approved: 08/15/01 11:52:25

COC#: 3109IHIE-01
Sample Desc:
Customer Comments:
Lab Smpl Comments:

Analy Meth:PORTS-XP4-TS-OA7033 QC Batch:QC01227013 Test:PCBWIPE Rpt Basis:Not Corrected Date Approved
Prep Meth: Analyzed:08/14/01 00:00:00 F R MACHESKY Approver: E K GILBERT 08/15/01 11:53

Analyte Name	Result	+/-	Unit	Qual	Fn	LCK	Dilu	HT	CLP
PCB, Total	10		ug/wipe	U		10	1		

EPA Qualifiers:

U Analyte analyzed for but undetected. Analyte result was below the Limit of Quantitation (LOQ).

08/15/01 12:00
310925-6PCBW01

X012130107

Portsmouth Analytical Laboratory
Official Report

Customer Smpl Id: 310925-6PCBW01
Project 2%-02-It: KCW005069E
Subproj Analysis:WIPE
Customer:N J SMITH

Matrix: WIPE:
Protocol:NONE
Status: APPROVED
Location:

Sampled: 07/20/01 10:20:00
Received: 08/01/01 14:00:01
Needed: 08/15/01 23:59:00
Approved: 08/15/01 11:52:56

COC#: 310SIHIE-01
Sample Desc:
Customer Comments:
Lab Smpl Comments:

Analy Meth:PORTS-XD4-TS-OA7033 QC Batch:QC01227013 Test:PCBWIPE Rpt Basis:Not Corrected Date Approved
Prep Meth: Analyzed:08/14/01 00:00:00 F R MACHESKY Approver: E K GILBERT 08/15/01 11:51

Analyte Name	Result	+/-	Unit	Qual	Pm	LCR	Dilu	HT	CLP
PCB, Total	10		ug/wipe	U		10	1		

EPA Qualifiers:
U - Analyte analyzed for but undetected. Analyte result was below the Limit of Quantitation (LOQ).

Johns Manville

Johns Manville Corporation
10100 W. Ute Avenue (80127)
P.O. Box 625005
Littleton, CO 80162-5005
303 978 2000

COVER PAGE

September 10,2001

WESKEM, LLC.
Jan Buckmaster
5600 Hobbs Road
M/S 7431
Paducah, KY 42001

Laboratory Report ID: 01083003
Laboratory Name: Johns Manville Technical Center Industrial Hygiene Laboratory
Reference Number: KCWO05069A
Reference Name: DMSA 331-09
Site: Paducah

Dear Ms. Buckmaster:

The Johns Manville Technical Center (JMTC) has performed the following analytical services as requested. The results are calculated based upon the information supplied on the submission form. All laboratory data has been filed and are available upon request.
The JMTC IH Analytical Laboratory is accredited by the American Industrial Hygiene Association (AIHA) in the industrial hygiene program (Certificate No. 056) and in the environmental lead program for paint chips, dust wipes and soil.
If you have any questions, please call (303) 978-2584.

Scope of Work:

Requested Analysis	Number of Samples	Sampling Matrix	Method	Date of Analysis
Volatile Organic Compounds (VOCs)	1	6-liter Canister	EPA method TO-14A	9/6/2001

I certify that this sample data package is in compliance with SOW requirements (if applicable), both technically and for completeness, other than *the* conditions detailed in the case narrative. Release of the data contained in this hard-copy sample package and the computer-readable EDD, as applicable, submitted on diskette or by modem, has been authorized by the Laboratory Manager or the Manager's designee, as verified by the following signature.

Scott A. Steiner
Industrial Hygiene Project Manager

9/10/2001
Date

September 10,2001

Laboratory Report ID: 01083003
Laboratory Name: Johns Manville Technical Center
Industrial Hygiene Laboratory
Reference Number: KCWO05069A
Reference **Name:** DMSA 331-09
Requestor: Paducah

Sample Results

Date Received: 8/30/2001
Date Analyzed: 9/6/2001

Sample Matrix: 6-liter Canisters
Analytical Method: EPA method TO-14A

Laboratory Sample Number: **01083003-001**
Customer Sample Number: **3109Z3-4OVPS01**

Requested Analysis	MDL (ppb-v)	PQL (ppb-v)	Laboratory Blank (ppb-v)	DF	TOTAL(1) (ppb-v)	TOTAL(2) (ppb-v)	Flags*
Dichlorodifluoromethane (Freon 12)	0.28	2.00	0.00	1.00	1.50	1.50	J
Chloromethane	0.63	2.00	0.00	1.00	ND	< MDL	U
1,2-Dichlorotetrafluoroethane (Freon 114)	0.50	2.00	0.00	1.00	204.29	204.29	
Vinyl chloride	0.81	2.00	0.00	1.00	ND	< MDL	U
Bromomethane	0.62	2.00	0.00	1.00	ND	< MDL	U
Chloroethane	0.83	2.00	0.00	1.00	ND	< MDL	U
Trichlorofluoromethane (Freon 11)	1.58	4.00	0.00	1.00	< MDL	< MDL	U
1,1-Dichloroethene	2.60	4.00	0.00	1.00	ND	< MDL	U
Dichloromethane (Methylene chloride)	1.85	4.00	0.00	1.00	ND	< MDL	U
1,1,2-Trichlorotrifluoroethane (Freon 113)	1.35	4.00	0.00	1.00	ND	< MDL	U
1,1-Dichloroethane	0.88	2.00	0.00	1.00	ND	< MDL	U
cis-1,2-Dichloroethene	0.17	2.00	0.00	1.00	ND	< MDL	U
Chloroform	0.20	2.00	0.00	1.00	ND	< MDL	U
1,2-Dichloroethane	0.24	2.00	0.00	1.00	ND	< MDL	U
1,1,1-Trichloroethane	0.18	2.00	0.00	1.00	ND	< MDL	U
Benzene	0.15	2.00	0.00	1.00	1.32	1.32	J
Carbon tetrachloride	0.20	2.00	0.00	1.00	ND	< MDL	U
1,2-Dichloropropane	0.10	2.00	0.00	1.00	ND	< MDL	U
Trichloroethene	0.12	2.00	0.00	1.00	0.44	< MDL	U
cis-1,3-Dichloropropene	0.20	2.00	0.00	1.00	ND	< MDL	U
trans-1,3-Dichloropropene	0.29	2.00	0.00	1.00	ND	< MDL	U
1,1,2-Trichloroethane	0.08	2.00	0.00	1.00	ND	< MDL	U
Toluene	0.12	2.00	0.00	1.00	2.11	2.11	
1,2-Dibromoethane	0.17	2.00	0.00	1.00	ND	< MDL	U
Tetrachloroethene	0.18	2.00	0.00	1.00	ND	< MDL	U
Chlorobenzene	0.10	2.00	0.00	1.00	ND	< MDL	U
Ethyl benzene	0.13	2.00	0.00	1.00	0.51	0.51	J
m, p-Xyenes	0.20	2.00	0.00	1.00	2.29	2.29	
Styrene	0.19	2.00	0.00	1.00	2.16	2.16	
1,1,2,2-Tetrachloroethane	0.23	2.00	0.00	1.00	ND	< MDL	U
o-Xylene	0.12	2.00	0.00	1.00	0.68	0.68	J
1,3,5-Trimethylbenzene	0.21	2.00	0.00	1.00	0.56	0.56	J
1,2,4-Trimethylbenzene	0.18	2.00	0.00	1.00	0.92	0.92	J
1,3-Dichlorobenzene	0.28	2.00	0.00	1.00	ND	< MDL	U
1,4-Dichlorobenzene	0.31	2.00	0.00	1.00	0.47	0.47	J
1,2-Dichlorobenzene	0.30	2.00	0.00	1.00	ND	< MDL	U
1,2,4-Trichlorobenzene	0.77	4.00	0.00	1.00	ND	< MDL	U
Hexachloro-1,3-butadiene	0.66	4.00	0.00	1.00	ND	< MDL	U

September 10, 2001

Laboratory **Report ID:** 01083003
Laboratory Name: Johns Manville Technical Center
Industrial Hygiene Laboratory
Reference Number; KCWO05069A
Reference **Name:** DMSA 331-09
Requestor: Paducah

Sample Results

Date Received: 8/30/2001
Date Analyzed: 9/6/2001

Sample Matrix. 6-liter Canisters
Analytical Method: EPA method TO-14A

Laboratory Sample Number: **01083003-001**
Customer Sample Number: **3109Z3-4OVPS01**

Tentatively Identified Compound (TIC)	CAS Nos.	Laboratory Blank (ppb-v)	DF	TOTAL(3) (ppb-v)	TOTAL(2) (ppb-v)	Flags*
Acetaldehyde	75-07-0	0.0	1.0	22.2	22.2	
Butane	106-97-8	0.0	1.0	8.9	8.9	
Unknown	-	0.0	1.0	2.1	2.1	
2-Methylbutane	78-78-4	0.0	1.0	5.5	5.5	
Acetone	67-64-1	1.0	1.0	24.1	23.1	
1,1-Dichloro-1-fluoroethane	1717-00-6	0.0	1.0	8.1	8.1	
Unknown	-	0.0	1.0	1.9	1.9	
Carbon disulfide	75-15-0	0.0	1.0	15.3	15.3	
Unknown	-	0.0	1.0	2.6	2.6	
Butanal	123-72-8	0.0	1.0	3.6	3.6	
2-Butanone	78-93-3	0.0	1.0	3.6	3.6	
Hexane	110-54-3	0.0	1.0	20.7	20.7	
2-Methyl-1-pentene	763-29-1	0.0	1.0	3.5	3.5	
Pentanal	110-62-3	0.0	1.0	1.9	1.9	
Hexanal	66-25-1	0.0	1.0	2.1	2.1	
1-Ethenyl-3-methylbenzene	100-80-1	0.0	1.0	2.8	2.8	
Indene	95-13-6	0.0	1.0	4.0	4.0	
Naphthalene	91-20-3	0.0	1.0	6.8	6.8	
Benzocycloheptatriene	264-09-5	0.0	1.0	2.1	2.1	

Notes:
ppbv = *parts per billion (volume/volume)*
MDL = *Method Detection Limit*
PQL = *Practical Quantitation Limit*
RL = *Reporting Limit*
DF = *Sample dilution factor*
ND = *not detected*
TOTAL(1) = *Total sample concentration after sample dilution factor adjustment*
TOTAL(2) = *Total sample concentration after sample dilution factor adjustment and laboratory blank adjustment*
TOTAL(3) = *Total sample concentration after sample dilution factor adjustment. Concentration of TIC calculated using nearest internal standard and response ratio of 1:1*

Sample Result Qualifiers

B	Analyte found in the Laboratory blank and sample.
E	Sample concentration exceeds the calibration range of the instrument.
J	Semi-quantitative sample result value (value between MDL and PQL).
U	Undetected, analyzed for, but not detected (value below MDL).
M	Result value exceeded calibration range.

September 10,2001

Laboratory Report ID: 01083003
Laboratory Name: Johns Manville Technical Center
Industrial Hygiene Laboratory
Reference Number: KCWO05069A
Reference Name: DMSA 33 1-09
Requestor: Paducah

Quality Assurance Results Summary

Sample Matrix: 6-liter Canisters
Analytical Method: EPA method TO-14A

Date Analyzed: 9/5/2001

Laboratory QC Type: Method Blank
Laboratory QC Number: Canister Blank

Requested Analysis	MDL (ppb-v)	PQL (ppb-v)	Actual Amount Spiked (ppb-v)	Actual Amount Recovered (ppb-v)	Percent Recovery	Pass / Fail
Dichlorodifluoromethane (Freon 12)	0.28	2.00	< MDL	< MDL	N/A	pass
Chloromethane	0.63	2.00	< MDL	< MDL	N/A	pass
1,2-Dichlorotetrafluoroethane (Freon 114)	0.50	2.00	< MDL	< MDL	N/A	pass
Vinyl chloride	0.81	2.00	< MDL	< MDL	N/A	pass
Bromomethane	0.62	2.00	< MDL	< MDL	N/A	pass
Chloroethane	0.83	2.00	< MDL	< MDL	N/A	pass
Trichlorofluoromethane (Freon 11)	1.58	4.00	< MDL	< MDL	N/A	pass
1,1-Dichloroethene	2.60	4.00	< MDL	< MDL	N/A	pass
Dichloromethane (Methylene chloride)	1.85	4.00	< MDL	< MDL	N/A	pass
1,1,2-Trichlorotrifluoroethane (Freon 113)	1.35	4.00	< MDL	< MDL	N/A	pass
1,1-Dichloroethane	0.88	2.00	< MDL	< MDL	N/A	pass
cis-1,2-Dichloroethene	0.17	2.00	< MDL	< MDL	N/A	pass
Chloroform	0.20	2.00	< MDL	< MDL	N/A	pass
1,2-Dichloroethane	0.24	2.00	< MDL	< MDL	N/A	pass
1,1,1-Trichloroethane	0.18	2.00	< MDL	< MDL	N/A	pass
Benzene	0.15	2.00	< MDL	< MDL	N/A	pass
Carbon tetrachloride	0.20	2.00	< MDL	< MDL	N/A	pass
1,2-Dichloropropane	0.10	2.00	< MDL	< MDL	N/A	pass
Trichloroethene	0.12	2.00	< MDL	< MDL	N/A	pass
cis-1,3-Dichloropropene	0.20	2.00	< MDL	< MDL	N/A	pass
trans-1,3-Dichloropropene	0.29	2.00	< MDL	< MDL	N/A	pass
1,1,2-Trichloroethane	0.08	2.00	< MDL	< MDL	N/A	pass
Toluene	0.12	2.00	< MDL	< MDL	N/A	pass
1,2-Dibromoethane	0.17	2.00	< MDL	< MDL	N/A	pass
Tetrachloroethene	0.18	2.00	< MDL	< MDL	N/A	pass
Chlorobenzene	0.10	2.00	< MDL	< MDL	N/A	pass
Ethyl benzene	0.13	2.00	< MDL	< MDL	N/A	pass
m, p-Xyenes	0.20	2.00	< MDL	< MDL	N/A	pass
Styrene	0.19	2.00	< MDL	< MDL	N/A	pass
1,1,2,2-Tetrachloroethane	0.23	2.00	< MDL	< MDL	N/A	pass
o-Xylene	0.12	2.00	< MDL	< MDL	N/A	pass
1,3,5-Trimethylbenzene	0.21	2.00	< MDL	< MDL	N/A	pass
1,2,4-Trimethylbenzene	0.18	2.00	< MDL	< MDL	N/A	pass
1,3-Dichlorobenzene	0.28	2.00	< MDL	< MDL	N/A	pass
1,4-Dichlorobenzene	0.31	2.00	< MDL	< MDL	N/A	pass
1,2-Dichlorobenzene	0.30	2.00	< MDL	< MDL	N/A	pass
1,2,4-Trichlorobenzene	0.77	2.00	< MDL	< MDL	N/A	pass
Hexachloro-1,3-butadiene	0.66	2.00	< MDL	< MDL	N/A	pass

September 10, 2001

Laboratory Report ID: 01083003
Laboratory Name: Johns Manville Technical Center
Industrial Hygiene Laboratory
Reference Number: KCWO05069A
Reference Name: DMSA 331-09
Requestor: Paducah

Quality ance R Summai

Sample Matrix: 6-liter Canisters
Date Analyzed: 9/5/2001
Analytical Method: EPA method TO-14A

Laboratory QC Type: **Independent Source Check** Standard
Laboratory QC Number: 2nd Standard

Requested Analysis	MDL (ppb-v)	PQL (ppb-v)	Actual Amount Spiked (ppb-v)	Actual Amount Recovered (ppb-v)	Percent Recovery	Pass / Fail
Dichlorodifluoromethane (Freon 12)	0.28	2.00	20.313	26.70	131.4%	pass
Chloromethane	0.63	2.00	20.508	25.61	124.9%	pass
1,2-Dichlorotetrafluoroethane (Freon 114)	0.50	2.00	20.508	28.39	138.4%	pass
Vinyl chloride	0.81	2.00	20.508	28.03	136.7%	pass
Bromomethane	0.62	2.00	20.508	27.95	136.3%	pass
Chloroethane	0.83	2.00	20.508	25.99	126.7%	pass
Trichlorofluoromethane (Freon 11)	1.58	4.00	20.313	27.48	135.3%	pass
1,1-Dichloroethene	2.60	4.00	20.117	26.67	132.6%	pass
Dichloromethane (Methylene chloride)	1.85	4.00	20.508	27.50	134.1%	pass
1,1,2-Trichlorotrifluoroethane (Freon 113)	1.35	4.00	20.313	23.82	117.3%	pass
1,1-Dichloroethane	0.88	2.00	20.703	26.07	125.9%	pass
cis-1,2-Dichloroethene	0.17	2.00	20.508	26.81	130.7%	pass
Chloroform	0.20	2.00	20.703	28.42	137.3%	pass
1,2-Dichloroethane	0.24	2.00	20.703	26.24	126.7%	pass
1,1,1-Trichloroethane	0.18	2.00	20.703	32.25	155.8%	fail
Benzene	0.15	2.00	20.898	24.61	117.8%	pass
Carbon tetrachloride	0.20	2.00	20.313	32.83	161.6%	fail
1,2-Dichloropropane	0.10	2.00	20.703	25.94	125.3%	pass
Trichloroethene	0.12	2.00	20.508	24.14	117.7%	pass
cis-1,3-Dichloropropene	0.20	2.00	20.508	27.38	133.5%	pass
trans-1,3-Dichloropropene	0.29	2.00	20.703	27.43	132.5%	pass
1,1,2-Trichloroethane	0.08	2.00	20.703	25.61	123.7%	pass
Toluene	0.12	2.00	20.703	24.60	118.8%	pass
1,2-Dibromoethane	0.17	2.00	20.703	27.43	132.5%	pass
Tetrachloroethene	0.18	2.00	20.508	25.50	124.3%	pass
Chlorobenzene	0.10	2.00	20.313	24.46	120.4%	pass
Ethyl benzene	0.13	2.00	20.508	26.27	128.1%	pass
m, p-Xyenes	0.20	2.00	41.016	57.16	139.4%	pass
Styrene	0.19	2.00	19.922	21.87	109.8%	pass
1,1,2,2-Tetrachloroethane	0.23	2.00	20.313	23.44	115.4%	pass
o-Xylene	0.12	2.00	20.313	23.30	114.7%	pass
1,3,5-Trimethylbenzene	0.21	2.00	20.703	23.27	112.4%	pass
1,2,4-Trimethylbenzene	0.18	2.00	20.703	23.34	112.7%	pass
1,3-Dichlorobenzene	0.28	2.00	19.922	22.22	111.5%	pass
1,4-Dichlorobenzene	0.31	2.00	19.922	23.56	118.3%	pass
1,2-Dichlorobenzene	0.30	2.00	19.922	23.10	116.0%	pass
1,2,4-Trichlorobenzene	0.77	2.00	20.508	21.03	102.5%	pass
Hexachloro-1,3-butadiene	0.66	2.00	20.508	21.95	107.0%	pass

Johns Manville

Johns Manville Corporation
10100 W. Ute Avenue (80127)
P.O. Box 625005
Littleton, CO 80162-5005
303 978 2000

COVER PAGE

September 5,2001

WESKEM, LLC.
Jan Buckmaster
5600 Hobbs Road
M/S 7431
Paducah, KY 42001

Laboratory Report ID: 01083002
Laboratory Name: Johns Manville Technical Center Industrial Hygiene Laboratory
Reference Number: KCWO05069A
Reference Name: DMSA 331-09
Site: Paducah

Dear Ms. Buckmaster:

The Johns Manville Technical Center (JMTC) has performed the following analytical services as requested. The results are calculated based upon the information supplied on the submission form. All laboratory data has been filed and are available upon request.
The JMTC IH Analytical Laboratory is accredited by the American Industrial Hygiene Association (AIHA) in the industrial hygiene program (Certificate No. 056) and in the environmental lead program for paint chips, dust wipes and soil.
If you have any questions, please call (303) 978-2584.

Scope of Work:

Requested Analysis	Number of Samples	Sampling Matrix	Method	Date of Analysis
Organic Compounds (GC/FID)	1	Charcoal tube	OSHA 07	9/4/2001

Scott A Steiner
Industrial Hygiene Project Manager

9/5/01
Date

September 5,2001

Laboratory Report ID: 01083002
Laboratory Name: Johns Manville Technical Center
Industrial Hygiene Laboratory
Reference Number: KCWO05069A
Reference Name: OMSA 331-09
Requestor: Paducah

Sample Results

Date Received: 8/30/2001
Date Analyzed: 9/4/2001

Sample Matrix: Charcoal tube
Analytical Method: OSHA 07

Laboratory Sample Number: **01083002-001**
Customer Sample Number: **3109Z1-6OVPB01**

Requested Analysis	CAS #	Reporting Limit	Backup Section	Main Section	Total	Air Volume	Air Concentration
1,1-Dichloroethane	75-34-3	10 µg	< 10 µg	< 10 µg		-	-
1,2-Dichlorobenzene	95-50-1	11 µg	< 11 µg	< 11 µg			-
cis-1,2-Dichloroethene	540-59-0	12 µg	< 12 µg	< 12 µg			-
trans-1,2-Dichloroethene	540-59-0	12 µg	< 12 µg	< 12 µg			-
1,4-Dichlorobenzene	106-46-7	11 µg	< 11 µg	< 11 µg			-
Cyclohexane	110-82-7	10 µg	< 10 µg	< 10 µg			-
n-Hexane	110-54-3	11 µg	317 µg	192 µg			-
Isobutyl alcohol	78-83-1	10 µg	< 10 µg	< 10 µg			-

September 5, 2001

Laboratory Report ID: 01083002
Laboratory Name: Johns Manville Technical Center
Industrial Hygiene Laboratory
Reference Number: KCWO05069A
Reference Name: DMSA 331-09
Requestor: Paducah

Quality Assurance Results Summary

Date Analyzed: 9/4/2001

Sample Matrix: Charcoal tube
Analytical Method: OSHA 07

Laboratory QC Type	Laboratory QC Number	Requested Analysis	Expected Recovery	Actual Recovery	Percent Recovery	Pass / Fail
Preparation Blank	Prep. Blank	1,1-Dichloroethane	< 10 µg/ml	< 10 µg/ml	N/A	pass
		1,2-Dichlorobenzene	< 11 µg/ml	< 11 µg/ml	N/A	pass
		cis-1,2-Dichloroethene	< 12 µg/ml	< 12 µg/ml	N/A	pass
		trans-1,2-Dichloroethene	< 12 µg/ml	< 12 µg/ml	N/A	pass
		1,4-Dichlorobenzene	< 11 µg/ml	< 11 µg/ml	N/A	pass
		Cyclohexane	< 10 µg/ml	< 10 µg/ml	N/A	pass
		n-Hexane	< 11 µg/ml	< 11 µg/ml	N/A	pass
		Isobutyl alcohol	< 10 µg/ml	< 10 µg/ml	N/A	pass
Preparation Blank Spike	Prep. Spike	1,1-Dichloroethane	1411.2 µg/ml	1310.4 µg/ml	92.9%	pass
		1,2-Dichlorobenzene	1567.2 µg/ml	1555.1 µg/ml	99.2%	pass
		cis-1,2-Dichloroethene	1538.4 µg/ml	1445.2 µg/ml	93.9%	pass
		trans-1,2-Dichloroethene	1502.4 µg/ml	1395.9 µg/ml	92.9%	pass
		1,4-Dichlorobenzene	2480.0 µg/ml	2272.8 µg/ml	91.6%	pass
		Cyclohexane	934.8 µg/ml	894.6 µg/ml	95.7'46	pass
		n-Hexane	792.0 µg/ml	746.9 µg/ml	94.3%	pass
		Isobutyl alcohol	963.6 µg/ml	918.1 µg/ml	95.3%	pass

MUSEC
A Global Energy Company

September 24,2001

Ms. Jan Buckmaster
5600 Hobbs Road
Paducah, KY 42001

Ms. Marie Meszaros
Sample Management Office
NFT Incorporated
East Tennessee Technical Park:
Building K1035, Roam 114
Hwy. 58 and Blair Road
Oak Ridge, TN 37830

Dear Ms. Buckmaster and Ms. Meszaros:

Analytical Results – SDG No. 5069B – 092401 (P.O. 0000793)

The enclosed data reports contain analytical results of samples that were submitted to the Portsmouth Laboratory for SOW KCWO05069B on August 28,2001 – September 10, 2001. PCB sample reports to follow.

If you have any questions concerning the analyses or the data, please contact Nancy Smith at 740-897-3824.

Sincerely,

Debby Perez
ES&H Analytical Group Manager

DKP:cs

Enclosure

File: POEF-330-01-254

United States Enrichment Corporation
Portsmouth Gaseous Diffusion Plant, P.O. Box 628, Piketon, OH 45661
Telephone 740-897-2331 Fax 740-897-2909 http://www.usec.com

Portsmouth Analytical Laboratory
Official Report

Customer Smpl Id: 3109Z3-4META01
Project:X-02-IH KCW005069E
Subproj Analyses:AIR
Customer:N J SMITH

Matrix: AIR
Protocol:NONE
Status: APPROVED
Location;

Sampled: 07/20/01 00:00:00
Received: 08/29/01 15:30:13
Needed: 09/11/01 23:59:00
Approved: 09/12/01 13:34:12

COC#: PADUCAH
Sample Desc:
Customer Comments:
Lab Smpl Comments:

Analy Meth:NIOSH-7300-2 QC Batch:QC01253003 Test:7300FILTER Rpt Basis:Not Corrected Date Approved
Prep Meth: Analyzed:09/07/01 00:00:00 T E SHOOK Approver: E K GILBERT 09/12/01 13:33

Analyte Name	Result	+/-	Unit	Qual	Fn	LCR	Pilu	HT	CLF
Arsenic	0.332		ug/filter	U		0.332	a		
Beryllium	0.0054		ug/filter	B		0.00334	1		
cadmium	0.027		ug/filter	B		a.0256	1		
chromium	0.985		ug/filter	B		0.147	1		
Cobalt	0.132		ug/filter	B		0.0934	1		
Lead	0.75		ug/filter	B		0.322	1		
Nickel	0.191		ug/filter	B		0.121	1		
selenium	0.497		ug/filter	B		0.32	1		
Silver	0.0612		ug/filter	B		0.039	1		
Thallium	0.35		ug/filter	U		0.35	1		

Qualifiers:
Analyte result less than the Practical Quantitation Limit (PQL) and greater than or equal to the Instrument Detection Limit (IDL).
Analyte analyzed for but undetected. Analyte result was below the Instrument Detection Limit (IDL).

USEC PORTS Analytical Lab
P.O. Box 628 Piketon OH 45661 740-897-5702
Lab Director: Deborah K. Perez
***** END OF REPORT *****

Portsmouth Analytical Laboratory
Official Report

Customer Smpl Id: 3109Z1-6METB01
Project:X-02-IH KCWO05069B
Subproj Analyses:AIR
Customer:N J SMITH

Matrix: AIR
Protocol:NONE
Status: APPROVED
Location:

Sampled: 07/20/01 10:35:00
Received: 08/29/01 15:30:13
Needed: 09/11/01 23:59:00
Approved: 09/11/01 09:46:58

COC#: PADUCAH
Sample Desc:
Customer Comments:
Lab Smpl Comments:

Analy Meth:NIOSH-7300-2 QC Batch:QC01253002 Test:7300FILTER Rpt Basis:Not Corrected Date Approved
Prep Meth: Analyzed:09/06/01 00:00:00 T E SHOOK Approver: E K GILBERT 09/11/01 09:46

Analyte Name	Result	*/-	Unit	Qual	Fn	LCR	Dilu	HT	CLF
Arsenic	0.332		ug/filter	U		0.332	1		
Beryllium	0.00334		ug/filter	U		0.00334	1		
Cadmium	*0.0702*		ug/filter	B		0.0256	I		
Chromium	0.689		ug/filter	B		0.147	1		
Cobalt	*0.0934*		ug/filter	U		0.0934	1		
Lead	0.322		ug/filter	U		0.322	I		
Nickel	*0.22*		ug/filter	B		0.121	1		
Selenium	0.32		ug/filter	U		0.32	1		
Silver	0.039		ug/filter	U		3.039	1		
Thallium	0.35		ug/filter	U		3.35	1		

Qualifiers:
B - Analyte result less than the Practical Quantitation Limit (PQL) and greater than or equal to the Instrument Detection Limit (IDL).
Analyte analyzed for but undetected. Analytc result was below the Instrument Detection Limit (IDL).

USEC PORTS Analytical Lab
P.O. Box 628 Piketon OH 45661 740-897-5702
Lab Director: Deborah K. Perez

***** END OF REPORT *****